987-DURBAN CASTLE
1006-PRETORIA CASTLE

RETAIN

(2)

H & W
987/1006

Arg & bhd profile

© 2020
Lloyd's Register Foundation

003958-003963-0032

Nos 987 & 1006

FRAMING AND BULKHEAD PROFILE

DIMENSIONS 560-0" × 76-0" × 37-0" TO UPPER DECK

SCALES 1/8" = ONE FOOT (PROFILE)
1/4" = ONE FOOT (DETAILS)

ALL SCANTLINGS - N.B.S.

PROM. DECK
SHADE DECK
UPPER DECK
STEERING GEAR
MAIN DECK
PASSENGERS
BRIDGE END
INSULATED CARGO SPACE
CARGO SPACE
WATER BALLAST
TUNNEL RECESS
AFT END FRAMING WITH BOSSING TO BE SUBMITTED LATER
STIFFENERS SPACED 24" TO BE SUBMITTED WITH AFT END FRAMING
4 × 2½ × .28 B.A. SPACED 30" APART
PASSAGE
CARGO BETWEEN TUNNELS
STORE AT SIDES
F.W. TANK AT SIDES PLAN TO BE SUBMITTED
SPACE AT SIDES AND BETWEEN TUNNELS
FRESH WATER OR WATER BALLAST
FRESH WATER
LOWER DECK
BOAT DECK
UPPER PROM. DECK
STORE
NAV. BRIDGE
CHART ROOM
WHEEL HOUSE
OFFICERS
BOAT DECK "E"
LOUNGE
UPPER PROM. DK. "D"
PROM. DK. "C"
SHADE DK. "B"
UPPER DK. "A"
"C" dk.
1ST CLASS DINING SALOON
GALLEY
DECK AT SIDES "A"
DECK AT SIDES
STRINGER .40
MOTOR ROOM
AUXILIARY MOTOR ROOM
WEB FRAME DITTO
EVAPORATOR ROOM IN CENTRE
REFRIGERATING MACHINERY IN CENTRE
OIL FUEL AT SIDES
OIL FUEL
OIL BUNKERS SUBMITTED SEPARATELY
STORES
MAIN DK.
MAILS
BAGGAGE
CREW
F'CLE DECK
STORE
CARGO SPACE
STRINGER .48" FACE ANGLE 8 × 3½ × .46 ANG
CHAIN LKR
WASH PLATE
L.W.L.
BEAMS AT FORE PEAK STRINGERS 8 × 3 × .70 B.A. ON ALT FRAMES KNEES .38 .54"
FORE END FRAMING SUBMITTED SEPARATELY
W.T. BHD
TANK END
3/5 L.
1/2 L.
15%
5%
F.P.
FRAMES SPACED 24" APART
FRAMES SPACED 33" APART
FRAMES SPACED 27" APART
FRAMES 8 × 3½ × .46 B.A. EVERY FRAME TO SHADE DECK
FRAMES 8 × 3½ × 3½ × .40/.52 CHANNEL EVERY FRAME TO SHADE DECK
REVERSE FRAME 4 × 3½ × .40 EVERY FRAME BETWN MAIN DECK & TUNNEL DK.
FOR FRAMES BELOW TUNNEL DK. SEE AFT END FRAMING
NO REVERSE FRAMES
every 3rd frame between lower & bottom st. or frames 8 × 3½ × 3½ × .40/.52
REVERSE FRAMES 4 × 3½ × .40 (4 TO F.) EVERY FRAME TO LOWER DECK
FRAMES 8 × 3½ × 3½ × .40/.52 CHANNEL TO SHADE DECK & PROM. DECK ALT. INTERMEDIATE FRAMES 7 × 3½ × .38 ANG (SHADE DK. TO PROM. DK.) NOT SCARPHED
Support to top of Bhd. to be considered on St. plans
Frames in Oil Fuel Bkrs. to be considered in conjunction with Plan of Girders &c.
FRAMES 8 × 3½ × 3½ × .40/.52 EVERY FRAME TO PROM. DECK
REV. FRS 4 × 3½ × .40 (4 TO FRAME) EVERY FRAME TO LOWER DECK
REV. FRS EVERY FRAME TO LOWER DECK
TWEEN DK. FRAMES 8 × 3½ × 3½ × .40/.52 SCARPHED AT LOWER DECK
EVERY ALTN FRAME TO F'CLE DECK
INTERMEDIATE FRAMES 7 × 3½ × .38 ANG SHADE DK. TO F'CLE DK.
TANK TOP PLATING CARRIED OUT LEVEL TO SHIP SIDE

(X) End attachment accepted but between bracket & lug in a/c of size of Stiffs.

X See mid. section re Rev. frames

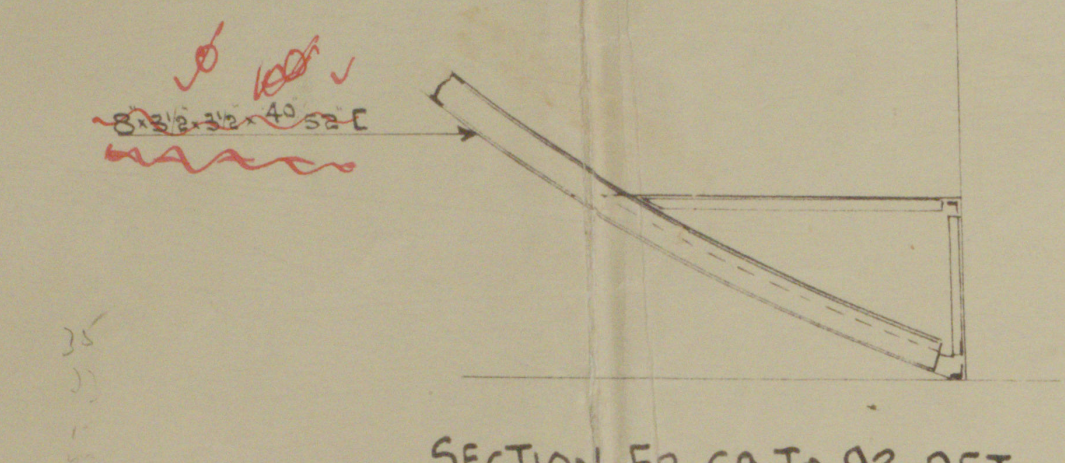
8 × 2½ × .32 = .40 .53 C

SECTION FR. 69 TO 92 AFT.

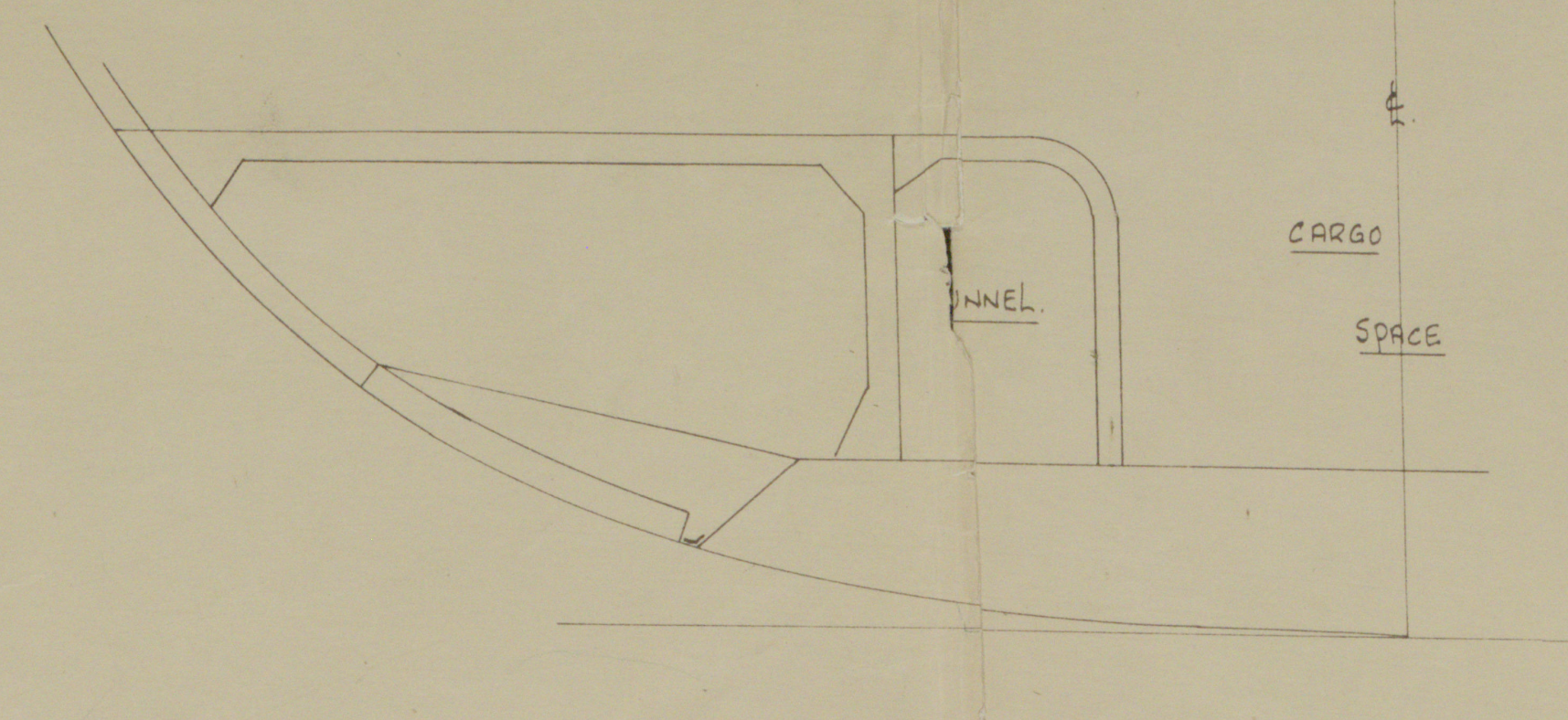
TUNNEL
CARGO SPACE

SECTION FRS 47 - 68 AFT

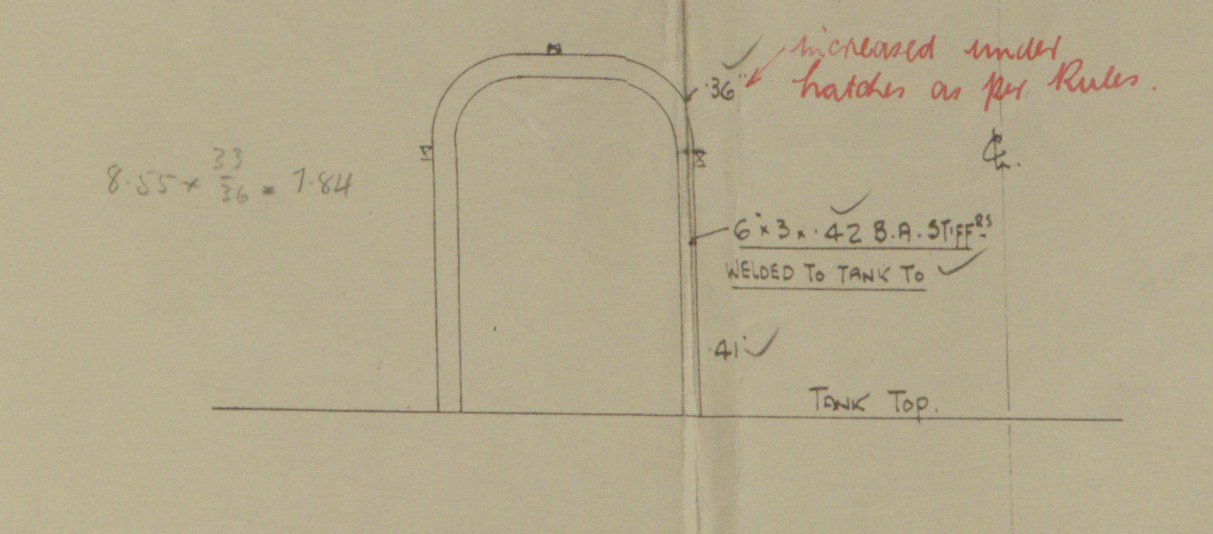
6 × 3 × .42 B.A. STIFF
WELDED TO TANK TOP
TANK TOP

SECTION THRO' TUNNEL.
FRS 26 - 44 AFT.

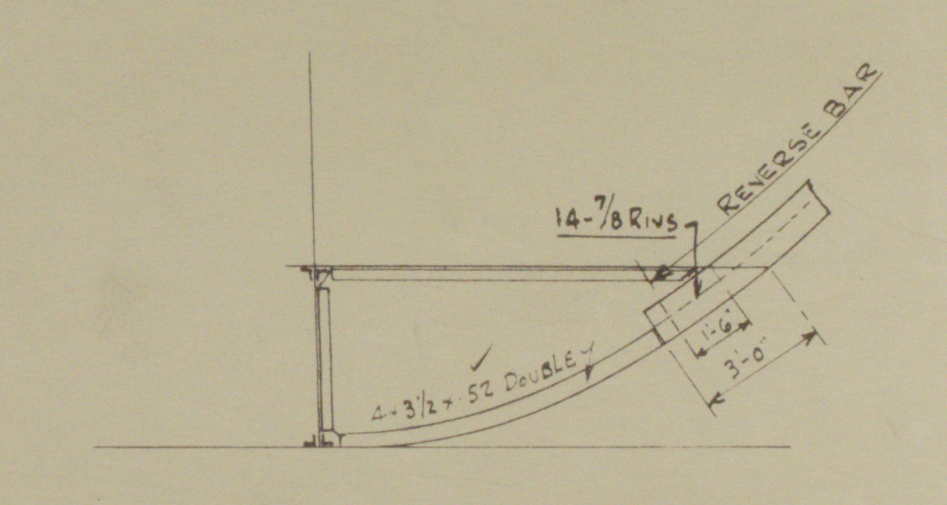

SECTION FRS 65 - 97 FORD

HARLAND & WOLFF LTD.
LONDON GLASGOW
BELFAST
LIVERPOOL & SOUTHAMPTON
SHIPBUILDERS & ENGINEERS
3rd Feb 37

8. 7. 37

003958-003963-0032

HARLAND & WOLFF

N°s 987 & 1006

DECKS PLAN

⑧

M/M-2630

987 DURBAN CASTLE ×

BEL RPT. 12.276

1006 PRETORIA CASTLE

BEL. RPT 12363

002630-002638-0002

30.4.37

Nos 987 & 1006

PLAN OF STEEL DECKS

Scale 1/8 = 1 foot

DIM.:- 560'-0" B.P. × 76'-0" × 37'-0" MLD. TO UPPER DECK.

TO CLASS 100. A.1. WITH FREEBOARD CORRESPONDING TO ALL SEASON'S.
MOULDED DRAFT NOT EXCEEDING 29'-0" ALL SECTION'S N.B.S

PARTS HATCHED RED

DECK SEAMS RIVETED & UNDERJOGGLED AND BUTTS WELDED ON BEAMS FOR FLUSH STEEL DECKS.

Casing may be single 10" × 3½ × 3½ × .44/.56 [if no support of casing etc. to be claimed. Support of casing to be shown on Casing Plan.

Doublings in way of doors to be considered with shell doublings on Plan of door openings.

BRIDGE DECK.
BRIDGE DK.
3/4 LENGTH
3/5 LENGTH
1/2 LENGTH
DECK WOOD SHEATHED OUTSIDE HOUSES
STRINGER ANGLE 6 × 6 × .68"
STRINGER PLATE 80" × .64"
GIRDER UNDER.
8" CHANL BEAM
12" DOUBLE CHANL
8" BEAM CARRIED THRO' CASING SIDE & LAPPED ON STIFFR. NO LUG OUTSIDE
3'-0"
8'-3" OFF ℄.
2'-6"
1'-6"
.50"
7/8 RIVS.
3½" FLANGE
6 × 3 × .50 B.A. DOUBLE
14'-0" OFF ℄ LINE
6" × 3" × .50" B.A. SINGLE STIFFR
F'CLE DECK.
SHADE DECK.
UPPER DECK.
MAIN DECK.
LOWER DECK
MOTOR CASING
AUX MOTOR CASING
MOTOR ROOM
AUX MOTOR ROOM
TUNNEL RECESS TOP & F.W. TANK.
NO 1 HATCH
NO 2 HATCH
NO 3 HATCH
NO 4 HATCH
NO 5 HATCH
24" FRAME SPACING
27" FRAME SPACING
33" FRAME SPACING
TEAK SHEATHING IN WELL
BEAMS 8 × .40" × 3" × 3" × .44 CHANL
KNEES 28½ × .54" 6-7/8 RIVS.
BEAMS 6 × 3" × .48 B.A.
KNEES 18" × .40 4-3/4" RIVS.
STRINGER ANGLE 3 × 3 × .34
BEAMS 8 × 3 × .46" B.A.
C.L.B.
W.T.B.
DETAIL OF BEAM SCARPH
Scale 1/2" = 1 foot
FRS. 54-61 AFT.
2'-0" SCARPH
TUNNEL DK.
2'-3" RAD.
8-3/4 RIVS.
9" CHANL BEAM.
TUNNEL SIDE
SECTION THRO' F.W. TANK. & SHAFT TUNNEL.
FRS. 48 - 55 AFT.
Scale 1/4" = 1 foot
TUNNEL DECK.
WASHPLATE
F.W. TANK
SHAFT. TUNNEL.
TANK TOP.
6" × 3" × .52 B.A.
7 × 3 × .32

LOWER DECK

30.4.37

L.R.

HARLAND & WOLFF LTD
LONDON GLASGOW
BELFAST
LIVERPOOL & SOUTHAMPTON
SHIPBUILDERS & ENGINEERS
15th April 37

RETAIN

~~18~~ 8

Harland & Wolff's.

987 & 1006.

987. DURBAN CASTLE
1006. PRETORIA CASTLE

Plan of steel decks.

Warwick Castle

~~102~~

003958-003963-0033

Deck
Plan shewing extent of aranbee deck covering
flush deck plating in lieu of

003958-003963-0033

© 2020
Lloyd's Register
Foundation

Nos 987 & 1006

PLAN OF STEEL DECKS

Scale 1/8 = 1 foot

DIM.:- 560'-0" B.P. × 76'-0" × 37'-0" MLD. TO UPPER DECK.

TO CLASS 100. A.1. WITH FREEBOARD CORRESPONDING TO ALL SEASON'S.
MOULDED DRAFT NOT EXCEEDING 29'-0"   ALL SECTION'S N.B.S

BRIDGE DECK.
3/4 LENGTH
3/5 LENGTH
1/2 LENGTH
F'CLE DECK.
SHADE DECK.
UPPER DECK.
Prom Deck (Bridge for P & O)
per Sect.
upper Sect
Old note?
STRINGER ANGLE 3½ × 3½ × .34
STRINGER PLATE 38" × .34
GIRDER UNDER
STEEL BHD UNDER.
8 × .44 × 3½ × 3½ × .52 CHANNL
KNEES 28½ × .54 - 6-7/8 RIVS.
NO 5 HATCH
NO 4 HATCH
NO 3 HATCH
NO 2 HATCH
NO 1 HATCH
MOTOR
CASING.
L.E.A.
STAIRWAY OPENING.
ELEVTR.
W.T.B. UNDER
STRINGER ANGLE 5 × 5 × .48
STRINGER PL. 44" × .48
5 × 3 TEAK SHEATHING IN WELL
BEAMS 8 × 3 × .34 B.A.
KNEES 24" × .40 5-7/8 RIVS.
PLATING INCREASED UNDER WINDLASS & EXTRA STIFFENING ARRANGED
PARTS TINTED RED
DECK SEAMS RIVETED AND UNDERJOGGLED AND BUTTS WELDED ON BEAMS FOR FLUSH STEEL DECK SEE DETAILS ON SEPARATE PLAN
OVERHANG OF BEAMS ON ALL DECKS TO BE CONSIDERED WITH CASING PLAN.
BEAMS 8 × .32 × 3½ × 3½ × .52 CHANL
½ BEAMS 8" × .32 × 3½ × 3½ × .52" CHANNLS KNEES 24" × .54" 5-7/8 RIVS.
6 × 3" × .44 B.A.
18" × .40 4-7/8 R.
43" × .38
See Deck plans already approved,
Nos 987 & 1006 STEEL DECKS
for L.R.
HARLAND & WOLFF LTD
LONDON GLASGOW
2/8/37
BELFAST
LIVERPOOL SOUTHAMPTON
SHIPBUILDERS & ENGINEERS

102

MIDSHIP SECTION

H + W

987/1006.

①

987-DURBAN CASTLE
1006-PRETORIA CASTLE

Mid section

RETAIN

003958-003963-0031

Nos 987 & 1006

MIDSHIP SECTION.

SCALE 1/2" - 1 FOOT.

DIMENSIONS 560'-0" BP. x 76'-0" x 37'-0" MLD TO ~~UPPER~~ 2nd DECK.

TO LLOYDS CLASS 100 A1 WITH FREEBOARD FOR A DRAFT NOT EXCEEDING 29'-0 MLD Mill Shelterdeck

ALL SECTIONS N.B.S.

D	~~(37 x 29/102.3)~~ + 8	=	~~42.89~~ 42.892
L x D	560 x 42.89	=	~~24018.40~~ 24371
L x (B+D)	560 x (76 + ~~42.89~~)	=	~~66578.40~~ 66931
L/D to Shade Dk (Lloyds Upper Dk)	560 ÷ 45.5	=	12.3 ✓
L/D to Promenade Dk	560 ÷ 54	=	10.37 ✓
d		=	16.875

EQUIPMENT NUMERALS

L x (B+D)		=	~~66578.4~~ 68040
Shade Deck	284 x 75 x 8.5 ✓	=	18105 ✓
" "	69 x 50 x 8.5		29325 ✓
Forecastle Deck	105 x 75 x 8.5 ✓	=	66938 ✓
Promenade Dk House	208 ✓ x 50 x 8.5	=	884.00 ✓
" " "	45 ✓ x 50 x 8.5	=	191.25 ✓
Upper Prom Dk House	172 ✓ x 50 x 8.5	=	731.00 ✓
Boat Deck House	140 ✓ x 50 x 8.0 ✓	=	560.00 ✓
			71717.78 73179.38

Erections to be verified when deck plans submitted. Equipment No not to exceed 73400.

EQUIPMENT 2†

3 Bower Anchors (Stockless) ~~118~~ 112 CWTS (Coll Wt 336 CWTS) or 2 @ 118 + 1 @ 100

1 Stream Anchor (Ex Stock) 35 1/2 CWTS. ✓

330 FTHMS 3" Stud Chain Cable ✓

150 FTHMS 6" Steel Wire (Stream) 6 x 24 Flexible.

140 " 7" " " (Towline) " "

3 @ 120 FTHMS 2 3/4" " " or 8" Hemp (Hawsers)

3 @ 120 " 2 3/4" " " 8" " (Warps) 6 x 12 Flexible.

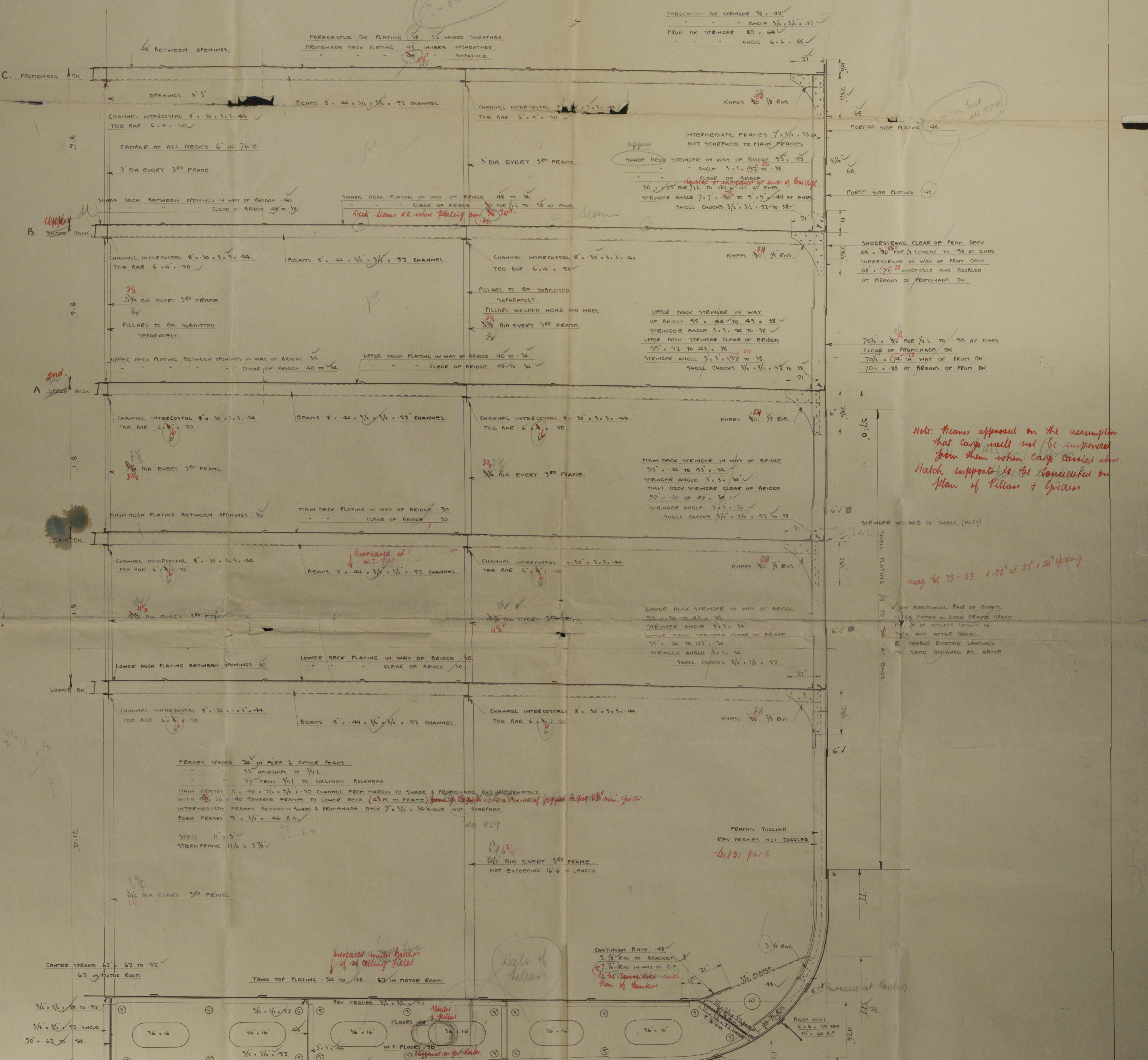

7'-0" but all 954
FORECASTLE DK PLATING .38. .32 WHERE SHEATHED.
PROMENADE DECK PLATING .48 WHERE UNSHEATHED.
" " " .46 .48" SHEATHED.
48" BETWEEN OPENINGS.
FORECASTLE DK STRINGER 38 x .42 ✓
" " " ANGLE 3 1/2 x 3 1/2 x .42 ✓
PROM DK STRINGER 80 x .64 ✓
" " " ANGLE 6 x 6 x .68 ✓
C. PROMENADE DK
OPENINGS 8'-3"
BEAMS 8 x .44 x 3 1/2 x 3 1/2 x .52 CHANNEL.
CHANNEL INTERCOSTAL 8 x .30 x 3 x 3 x .44 ✓
TEE BAR 6 x 4 x .50 ✓
KNEES ~~.50~~ .54 7/8 RIVS.
FORECLE SIDE PLATING .48
CAMBER AT ALL DECKS 6" IN 76'-0"
3" DIA EVERY 3RD FRAME
INTERMEDIATE FRAMES 7 x 3 1/2 x .38 OA
NOT SCARPHED TO MAIN FRAMES
upper SHADE DECK STRINGER IN WAY OF BRIDGE 55 x .52.
" ANGLE 3 x 3 x (52) .50 TO .38
" " CLEAR OF BRIDGE
doubled or increased at ends of Bridge
80 x 1.05 FOR 1/2 L TO .44 x .48 AT ENDS
STRINGER ANGLE 7 x 7 x .90 .96 TO 5 x 5 x .48 AT ENDS
SHELL CHOCKS 3 1/2 x 3 1/2 x .52 TO .38
SHADE DECK BETWEEN OPENINGS IN WAY OF BRIDGE .40
" " " CLEAR OF BRIDGE .48 TO .38
SHADE DECK PLATING IN WAY OF BRIDGE .48 TO .34
" " CLEAR OF BRIDGE .70 FOR 1/2 L TO .38 AT ENDS
Deck beams 2R where plating over .74".
B. ~~SHADE~~ Upper DECK
SHEERSTRAKE CLEAR OF PROM DECK
68 x ~~.90~~ .96 FOR 1/2 LENGTH TO .58 AT ENDS
SHEERSTRAKE IN WAY OF PROM DECK
68 x (74) .73 INCREASED AND DOUBLED
AT BREAKS OF PROMENADE DK.
PILLARS TO BE SUBMITTED SEPARATELY.
PILLARS WELDED HEAD AND HEEL.
3 1/2 ~~3 3/8~~ DIA EVERY 3RD FRAME
UPPER DECK STRINGER IN WAY OF BRIDGE 55 x .44 TO 43 x .38 ✓
STRINGER ANGLE 3 x 3 x .44 TO .38 ✓
UPPER DECK STRINGER CLEAR OF BRIDGE
55 x .52 TO 43 x .38
STRINGER ANGLE 3 x 3 x (52) .50 TO .38
SHELL CHOCKS 3 1/2 x 3 1/2 x .52 TO .38
70 1/2 x .82 .86 FOR 1/2 L TO .58 AT ENDS
CLEAR OF PROMENADE DK
70 1/2 x (74) .73 IN WAY OF PROM DK.
70 1/2 x .88 AT BREAKS OF PROM DK
UPPER DECK PLATING BETWEEN OPENINGS IN WAY OF BRIDGE .34
" CLEAR OF BRIDGE .40 TO .34
UPPER DECK PLATING IN WAY OF BRIDGE .40 TO .34
" CLEAR OF BRIDGE .48 TO .34
A 2nd ~~UPPER~~ DECK
37'-0"
Note: Beams approved on the assumption that cargo will not be suspended from them when cargo carried above. Hatch supports to be considered on plan of Pillars & Girders.
3 7/8 ~~3 3/4~~ DIA EVERY 3RD FRAME
MAIN DECK STRINGER IN WAY OF BRIDGE
55 x .34 TO 43 x .34
STRINGER ANGLE 3 x 3 x .34
MAIN DECK STRINGER CLEAR OF BRIDGE
55 x .30 TO 43 x .34
STRINGER ANGLE 3 x 3 x .34
SHELL CHOCKS 3 1/2 x 3 1/2 x .52 TO .38
MAIN DECK PLATING BETWEEN OPENINGS .30
MAIN DECK PLATING IN WAY OF BRIDGE .30
" CLEAR OF BRIDGE .30
STRINGER WELDED TO SHELL (ALTY)
MAIN DK
LWL
Increased at W.T. Flat.
SHELL PLATING .74 TO .54 AT ENDS
may be 73 - .53 + .02" at 27" & 24" spacing.
4 1/2 ~~4 3/8~~ DIA EVERY 3RD FRAME
LOWER DECK STRINGER IN WAY OF BRIDGE
55 x .34 TO 43 x .34
STRINGER ANGLE 3 x 3 x .34
LOWER DECK STRINGER CLEAR OF BRIDGE
55 x .34 TO 43 x .34
STRINGER ANGLE 3 x 3 x .34
SHELL CHOCKS 3 1/2 x 3 1/2 x .52
AN ADDITIONAL PAIR OF RIVETS TO BE FITTED IN EACH FRAME SPACE FOR 1/4 OF VESSELS LENGTH IN FORE AND AFTER BODIES
TREBLE RIVETED LANDINGS FOR SAME DISTANCE AS ABOVE
LOWER DECK PLATING BETWEEN OPENINGS .30
LOWER DECK PLATING IN WAY OF BRIDGE .30
" CLEAR OF BRIDGE .30
LOWER DK
CHANNEL INTERCOSTALS 8 x .30 x 3 x 3 x .44
FRAMES SPACED 24" IN FORE & AFTER PEAKS.
" " 33" AMIDSHIPS TO 3/5 L.
" " 27" FROM 3/5 L TO COLLISION BULKHEAD.
MAIN FRAMES 8 x .40 x 3 1/2 x 3 1/2 x .52 CHANNEL FROM MARGIN TO SHADE & PROMENADE DKS ALTERNATELY.
WITH 4 1/2 x 3 1/2 x .40 REVERSE FRAMES TO LOWER DECK. (4 1/2 PL TO FRAME) ... joggled to give 8 1/2" min. girder.
INTERMEDIATE FRAMES BETWEEN SHADE & PROMENADE DECK 7 x 3 1/2 x .38 ANGLE (NOT SCARPHED).
PEAK FRAMES 9 x 3 1/2 x .46 B.A. ✓
STEM 11 x 3 ✓
STERN FRAME 11 1/2 x 3 7/8 ✓
as 959
FRAMES TOGGLED.
REV FRAMES NOT JOGGLED.
Sect 31 par 2
6 3/4 ~~6 1/2~~ DIA EVERY 3RD FRAME.
NOT EXCEEDING 16'-6" IN LENGTH.
6 1/2 DIA EVERY 3RD FRAME
21'-4"
CONTINUOUS PLATE .48 ✓
5. 7/8 RIVS TO BRACKET.
7. 7/8 RIVS IN WAY OF O.F.
To be considered with plan of Bunkers.
3. 7/8 RIVS.
3 1/2 FLANGE
Heels of Pillars
Increased under hatches if no ceiling fitted
CENTRE STRAKE 62 x .62 TO .52 ✓
.62 IN MOTOR ROOM.
TANK TOP PLATING .54 TO .48. .62 IN MOTOR ROOM.
REV FRAMES 3 1/2 x 3 1/2 x .52
FLOORS .48
Under Pillars
W.T. FLOORS .56
stiffened as per Rules.
36" x 16"
3 1/2 x 3 1/2 x .58 TO .52
3 1/2 x 3 1/2 x .52 SINGLE
50 x .62 TO .54
5 x 5 x .62 TO .56
FRAMES 4 x 3 1/2 x .52
BILGE KEEL 6 x 6 x .54 TEE 15 x .60 B.P.
Increase at Landing
KEEL 60 x ~~.77~~ .78 FOR 3/5 L TO ~~.36~~ .61 AT ENDS
BOTTOM PLATING (77) FOR 1/2 L TO (58) AT ENDS.
may be 76 - .57 + .02 at 27" & 24" spacing.
FROM 1/2 L FORWARD 3 STRAKES NEXT KEEL ~~.84~~ .85 TO COLLISION BHD
BOTTOM FRAMES 4 x 3 1/2 x .52 SINGLE ✓
DOUBLE FROM 1/2 L FORR TO COLLISION BHD ✓

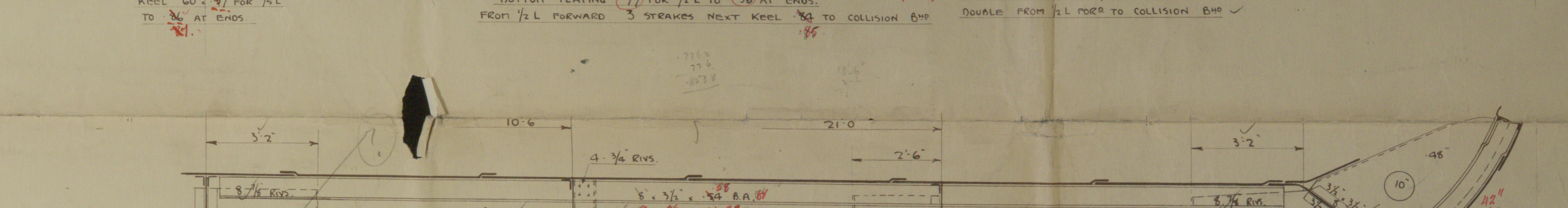

10'-6"
21'-0"
3'-2"
2'-6"
4 - 3/4 RIVS.
8 7/8 RIVS.
8 x 3 1/2 x .54 .58 B.A.
9 x 3 1/2 x .40 B.A.
3 1/2 x 3 1/2 x .52
.44
.48 at 33" sp
9 x 3 1/2 x .50 B.A.
18 1/4 x 13 1/4
3 1/2 FLANGE
.48
10"
MARGIN PL
41 1/2 x .64
SHELL ANGLE 4 x 3 1/2 x .64
3 1/2 x 3 1/2 x .52 DBL
3 1/2 x 3 1/2 x .52 SNL
7/8 RIVS NOT TO EXCEED 7 DIAS

Solid floors as per Rules. Partial or solid floors under pillars. Back bars to frames on bracket floors between 1/2 L and 3/5 L.

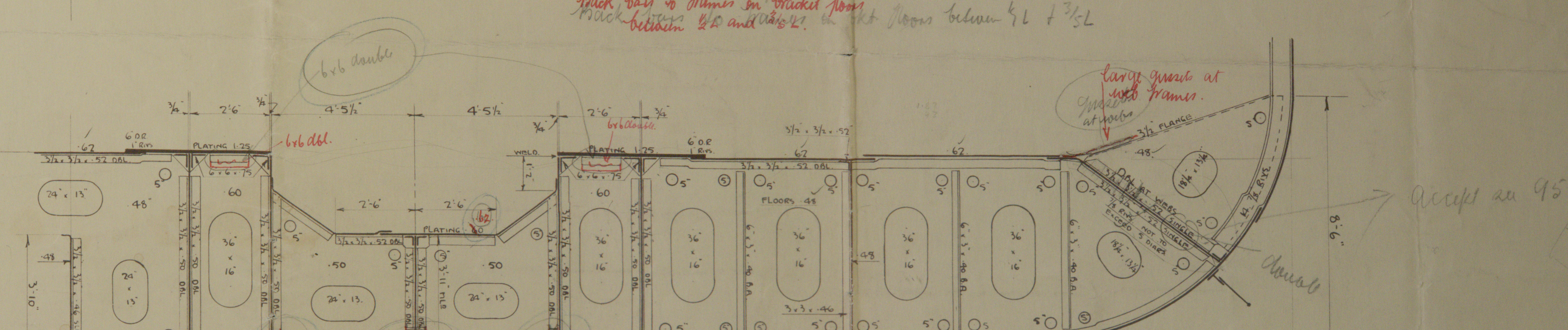

6x6 double
3/4
2'-6"
4'-5 1/2"
PLATING 1.25
6 x 6 x .75
6x6 dbl.
6x6 double
6'-0 R 1 RIVS.
.62
3 1/2 x 3 1/2 x .52 DBL
24" x 13"
.48
.60
36" x 16"
.50
2'-6"
PLATING .60 .62
3'-11" TLR
WELD
FLOORS .48
6 x 3 x .40 B.A.
3 x 3 x .46
4 x 3 1/2 x .52
3 1/2 x 3 1/2 x .50 DBL
3 1/2 x 3 1/2 x .52
6'-6" TLR
3'-10"
8'-6"
Large gussets at web frames.
Gussets at webs
3 1/2 FLANGE
18 1/4 x 13 1/4
7/8 RIVS NOT TO EXCEED 5 DIAS
accept as 959

SECTION IN WAY OF MOTOR ROOM.

? Plan

Max 10,000 BHP

18. 2. 37

HARLAND & WOLFF LTD BELFAST SHIPBUILDERS & ENGINEERS 3rd Feb 37

003958-003963-0031

HARLAND & WOLFF

Nos 987 & 1006

STERNFRAME & BOSS ARMS

③

987. DURBAN CASTLE ✳

BEL. RPT. 12276.

1006 PRETORIA CASTLE

BEL. RPT. 12363

M/M 2630

002630-002638-0003

LLOYD'S REGISTER OF SHIPPING

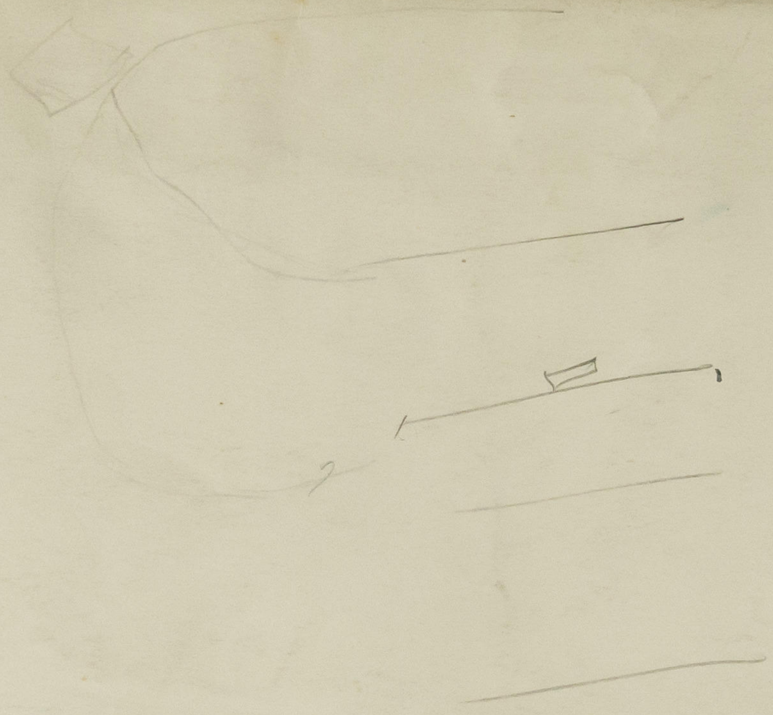

© 2020
Lloyd's Register Foundation

26.2.37

Nos 987 & 1006

STERNFRAME & BOSS ARMS.

SCALE :- 1/2" = ONE FOOT

MATERIAL:- MILD STEEL CASTING,
PINTLE – FORGED STEEL.

NOTES:-

FORGED STEEL PINTLE COMPLETE WITH HEXAGONAL NUT, SPLIT PIN, SET PIN IN LIFTING HOLE, & G.M. LINER TO BE SUPPLIED BY CONTRACTORS.

RIVET HOLES TO BE DRILLED BY CONTRACTORS AND TO BE 1/16" LARGER THAN DIA. OF RIVETS SHOWN

HOLES IN GUDGEON AND RUDDER TRUNK TO BE ACCURATELY ALIGNED IN ORDER TO OBTAIN CORRECT ADJUSTMENT OF RUDDER

STERNFRAME AND BOSS ARMS TO BE ASSEMBLED AT CONTRACTORS WORKS, CAREFULLY CHECKED, AND THEN TAKEN APART

CARE TO BE TAKEN THAT THICKNESSES OF METAL DIMENSIONED ON PLANS OF FULL SIZE SECTIONS ARE ADHERED TO.

PARTS TO BE MACHINED [TINTED RED]

BEARING SURFACES AT COUPLINGS –	FRAMES 99, 103, & 109
TOP & INSIDE OF RUDDER TRUNK	BORE & BOTTOM OF GUDGEON
BORE & ENDS OF BOSSING	PINTLE
BOLTED FLANGES OF BOSS ARMS ON ℄	CHECK IN WAY OF KEEL

PARTICULARS OF SHAFTING.

HEIGHT TO C.L. OF SHAFT AT
HALF BREADTH " " "
HEIGHT TO C.L. " " "
HALF BREADTH " " "
RAKE IN FROM PROPELLER INCH PER FOOT
" DOWN " " " " "
DIAMETER OF TAIL SHAFT = 19½

TESTS :- LLOYDS AND BOARD OF TRADE.

1" WEB
7/8" RIVETS
1 3/4
1 1/4
1"
1 3/4
1" WEBS
1" WEBS
1 3/4"
2'-6" DIA APPROX
2'-5 1/2" APPROX AT BOTTOM
AT TOP
1 1/4
3 1/4" AT TOP
3 3/4" AT BOTTOM
4"
2'-6" DIA APPROX
2'-5 1/2" APPROX
3/4
1 1/2"
2 1/4
1 WEB PORT SIDE WITH 1 ROW 7/8" RIVETS 5" APART
2 ROWS 1 1/8" RIVETS 5 5/8" APART
1 7/8"
20-1 1/8" RIVETS
20'-0" ABOVE BASE
1 1/4" WEB
3 1/2
3 ROWS 1 1/8" RIVETS 5 5/8" APART REELED
2 ROWS 1 1/8" RIVETS 5 5/8" APART
2 ROWS 7/8" RIVETS 4 1/2" APART
SECTION AT FRAME 106
12-2" DIA FITTED BOLTS
BOLTED FLANGE ON C̸L LINE
3 ROWS 1 1/8" RIVETS 5 5/8" APART
24-1 1/4" RIVETS
ALL WEBS 1" THICK EXCEPT WHERE MARKED OTHERWISE.
2'-4"
2'-1"
3'-6"
1'-2"
3'-0"
2 1/2"
3"
5"
AP
112
110
108
106
104
102
100
98
96
94
24" FRAME SPACING
2 ROWS 1" RIVETS 5" APART
2-2" DIA FITTED BOLTS
SECTION AT FRAME 99.
2 ROWS 1 1/8" RIVETS 5 5/8" APART
12 1/2"
18'-9"
1'-6" RAD
1'-5"
1 5/8
"X"
10'-9"
6 1/2" MEAN THICKNESS.
10'-6" AT PROPELLER TIPS
12'-0 AT C.L. OF PROPELLER TIPS
SECTION 3/4" AFT OF FRAME 98.
D³l / 100
= 19.5³ × 12 / 100
3"
2 1/2"
27"
2 1/4
1'-5"
3'-6" APPROX DIA
3'-4"
3/4" CHECK
1 1/2"
1 3/4" WEBS
FR. 99
FR. 98
2"
1 3/4"
3 ROWS 1 1/8" RIVETS 5 5/8" APART
PLAN VIEW AT "X" "X"

27.7.37

LR 17.2.37

002630-002638-0003

HARLAND & WOLFF

N°s 987 & 1006

RUDDER

M/M. 2630

④

987. DURBAN CASTLE.
BEL. RPT. 12,276.

1006 PRETORIA CASTLE.
BEL. RPT. 12,363

002630-002638-0001

© 2020
Lloyd's Register
Foundation

26.2.37

Nos 987 & 1006

RUDDER.

SCALE:- 1/2" = ONE FOOT.

MATERIAL:-	RUDDER STOCK	- FORGED STEEL.
	RUDDER FRAME	- MILD STEEL CASTING.
TESTS	LLOYDS AND BOARD OF TRADE.	

SPEED OF VESSEL = 19 KNOTS
MAX. ANGLE OF HELM = 35°
TOTAL EFFECTIVE AREA = 244 □'
AREA COEFFICIENT :- 560 × 28.8 ÷ 244 = 66.1

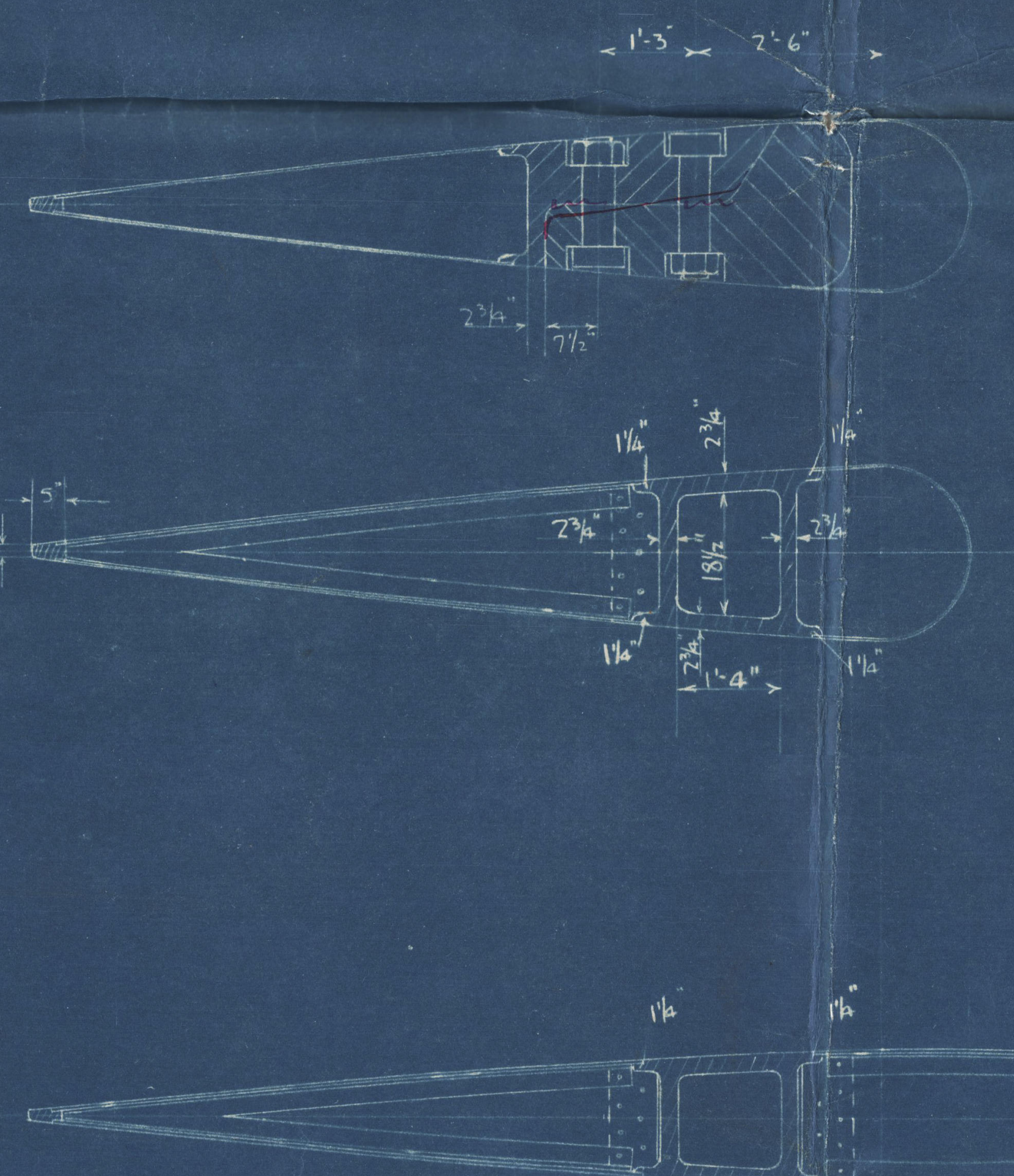

1'-3"
2'-6"
2 3/4"
7 1/2"
5"
1 1/2"
1 1/4"
2 3/4"
18 1/2"
2 3/4"
1 1/4"
2 3/4"
1'-4"
1 1/4"
1 1/4"
1 1/4"
1 1/4"
2 1/2"

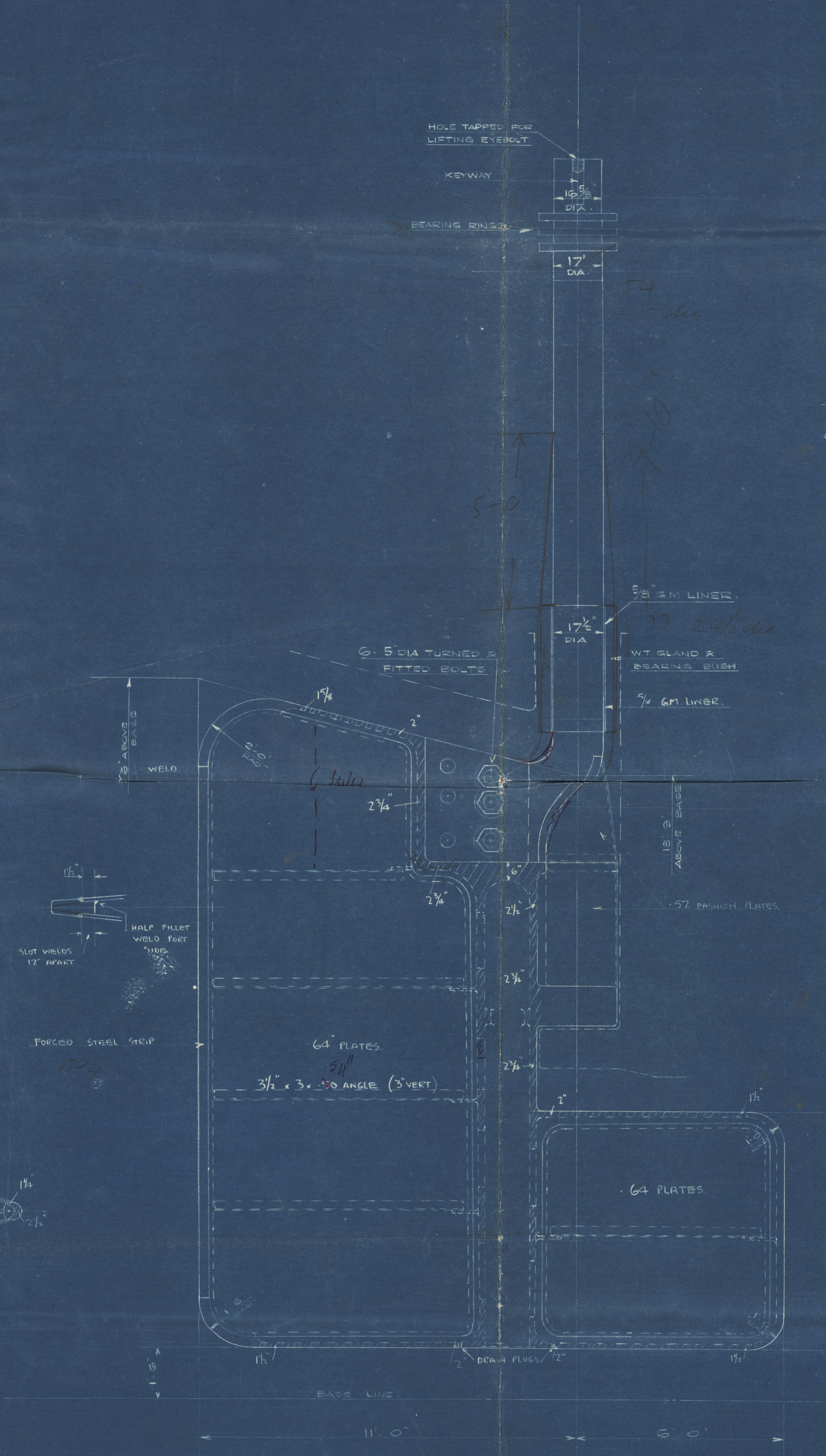

HOLE TAPPED FOR LIFTING EYEBOLT
KEYWAY
16 5/8" DIA.
BEARING RINGS
17" DIA.
54
17" dia
5'-0
5/8" GM LINER.
17 1/2" DIA
24 1/2" dia
6 - 5" DIA TURNED & FITTED BOLTS
WT GLAND & BEARING BUSH
5/8 GM LINER.
1 5/8
2"
2'-0" RAD
WELD.
ABOVE BASE
4 holes
2 3/4"
2 3/4"
6"
2 1/2"
2 3/4"
2 3/4"
18'-9" ABOVE BASE
.57 FASHION PLATES.
1 1/2"
HALF FILLET WELD PORT SIDE
SLOT WELDS 12" APART
FORGED STEEL STRIP
1704
64" PLATES.
54"
3 1/2" x 3 x .50 ANGLE (3" VERT)
2"
1 1/2"
64 PLATES.
1 1/2"
2"
DRAIN PLUGS
2"
1 1/2"
10"
BASE LINE
11'-0"
6'-0"

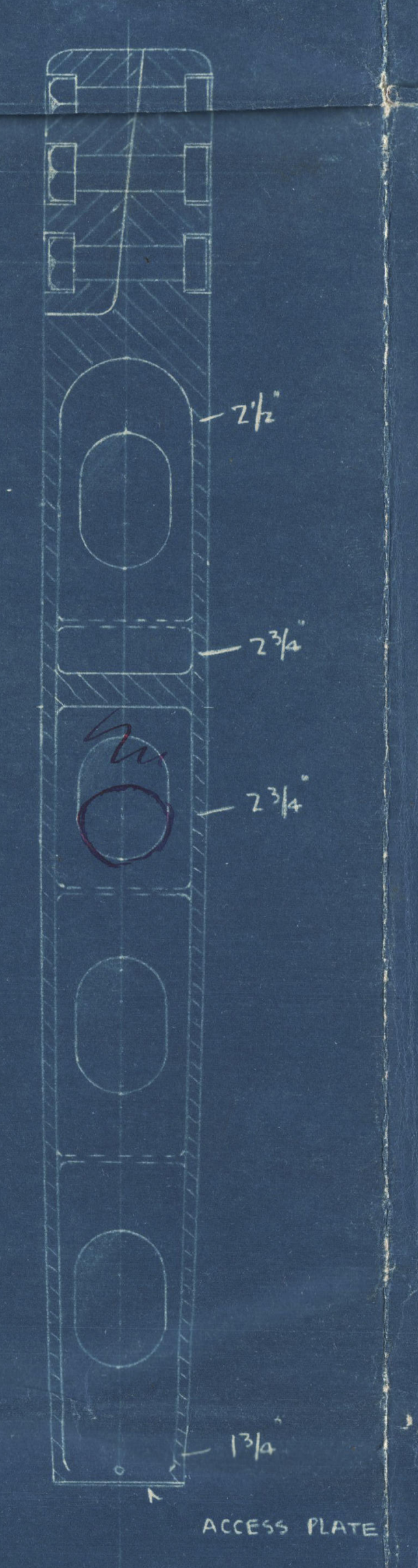

2 1/2"
2 3/4"
2 3/4"
2 3/4"
1 3/4"
ACCESS PLATE

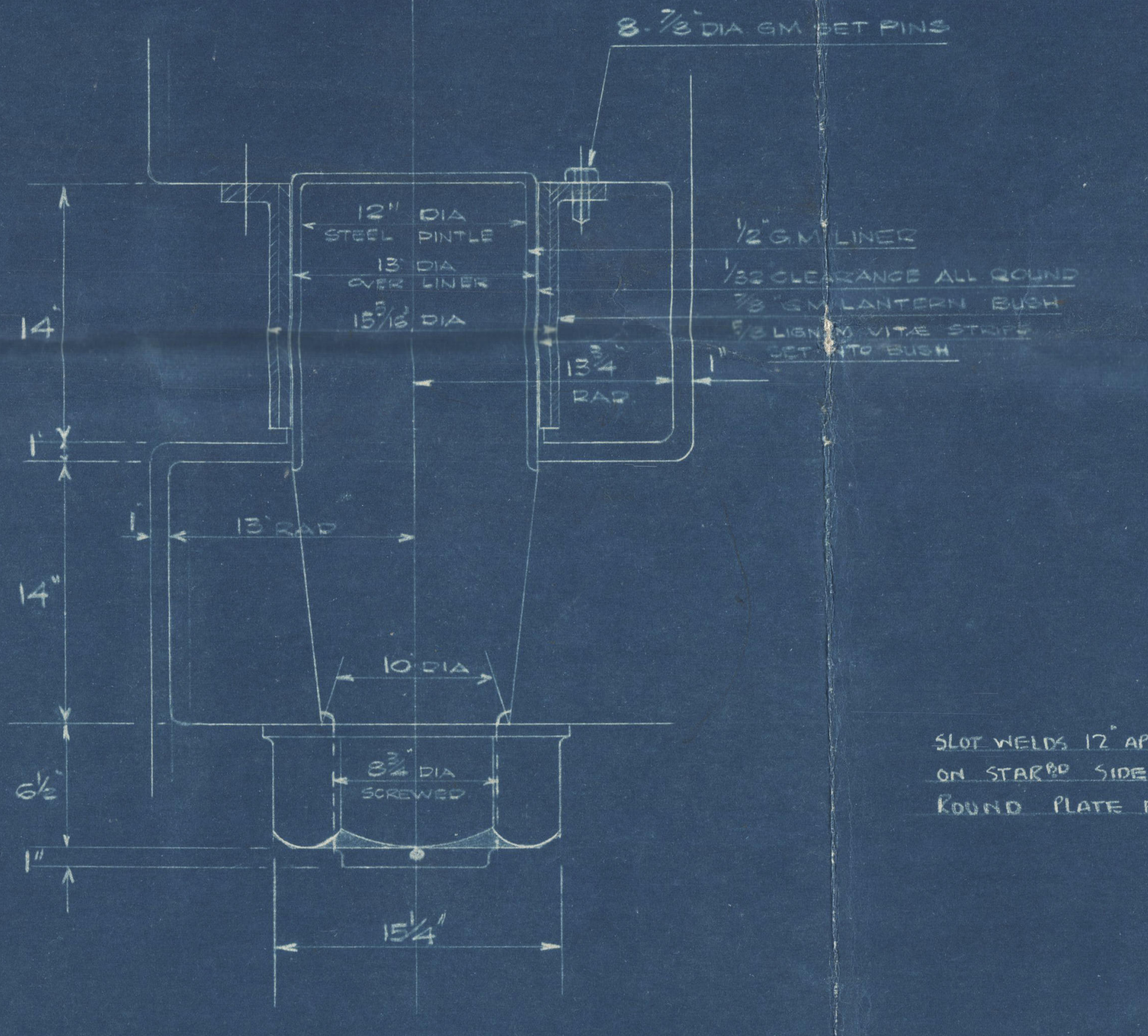

8 - 7/8" DIA GM SET PINS
12" DIA STEEL PINTLE
13" DIA OVER LINER
15 5/16" DIA
1/2" G.M. LINER
1/32 CLEARANCE ALL ROUND
7/8" G.M. LANTERN BUSH
5/8 LIGNUM VITAE STRIPS SET INTO BUSH
13 3/4" RAD.
1"
14"
1"
13" RAD
14"
10 DIA
8 3/4" DIA SCREWED
6 1/2"
1"
15 1/4"

DETAIL OF PINTLE

SCALE:- 1 1/2" = ONE FOOT

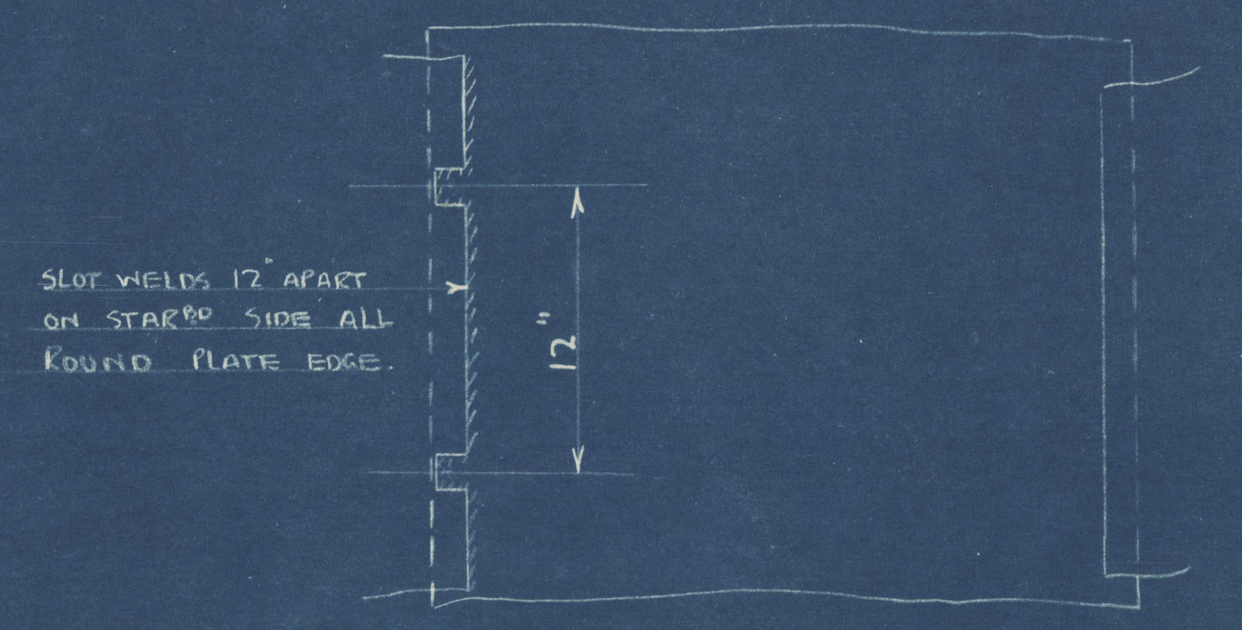

SLOT WELDS 12" APART ON STARBD SIDE ALL ROUND PLATE EDGE.
12"

ELEVATION. STARBD SIDE

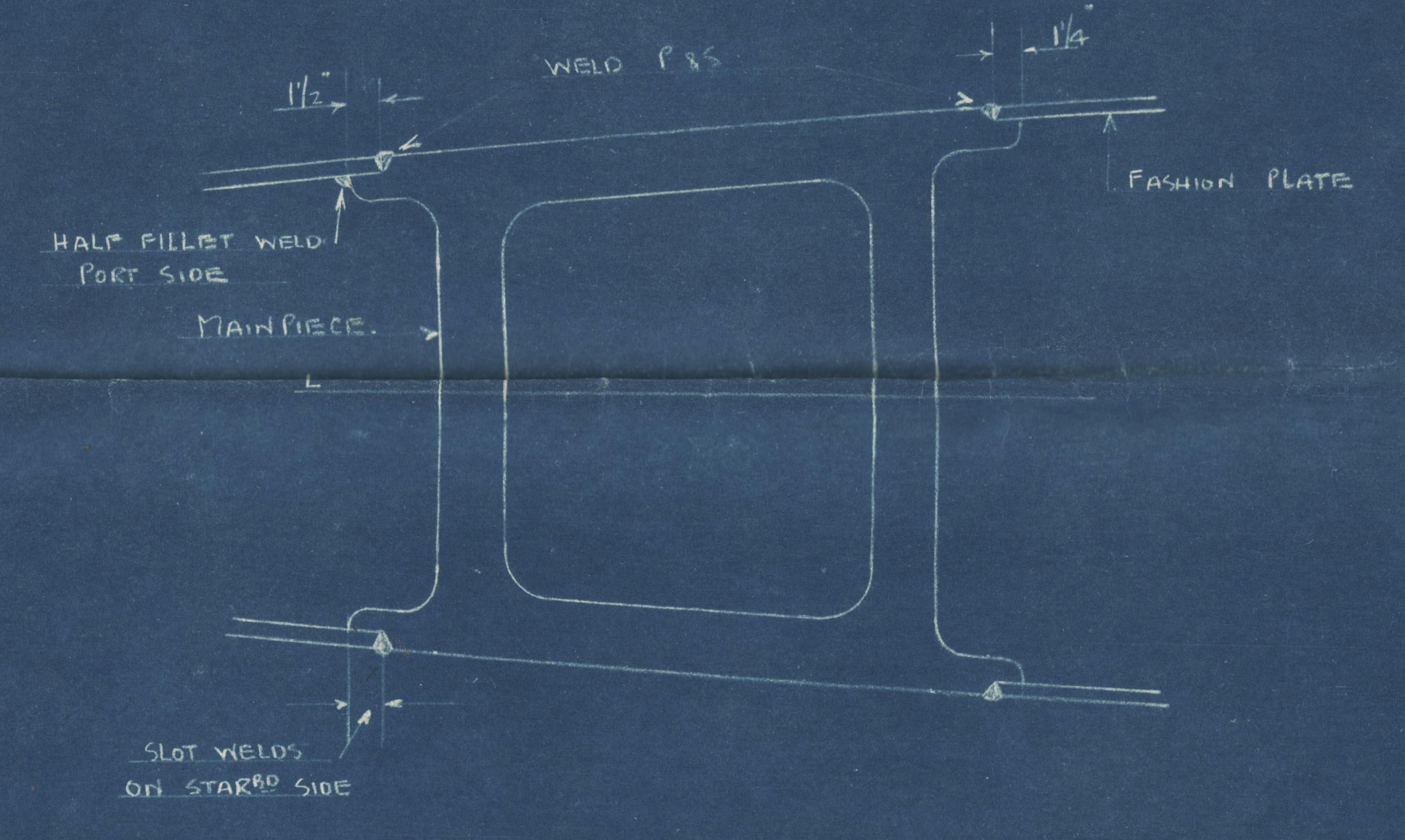

1 1/2"
WELD P & S
1 1/4"
FASHION PLATE
HALF FILLET WELD PORT SIDE
MAINPIECE.
SLOT WELDS ON STARBD SIDE

WELDING OF PLATES TO MAINPIECE.

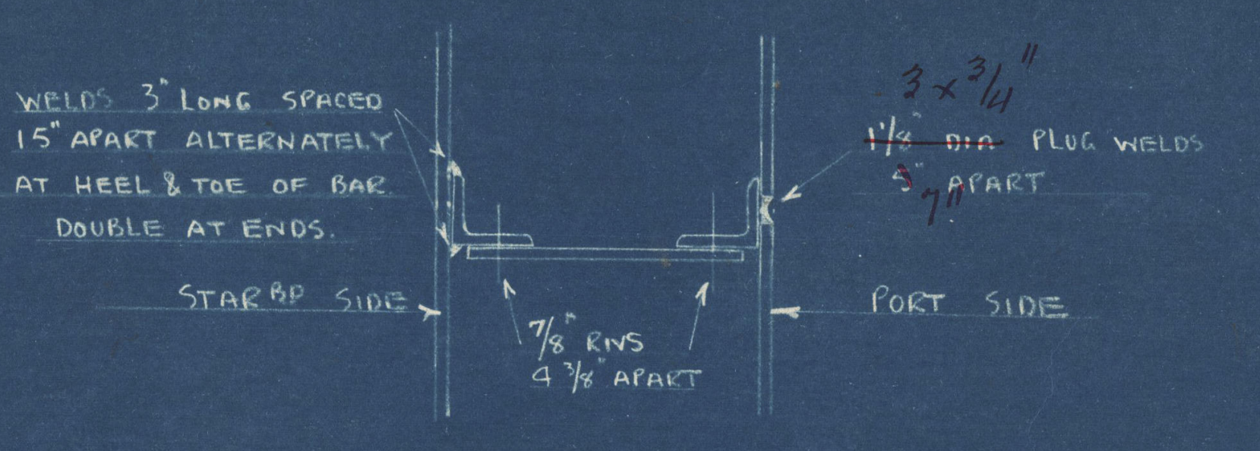

WELDS 3" LONG SPACED 15" APART ALTERNATELY AT HEEL & TOE OF BAR DOUBLE AT ENDS.
3 x 3/4"
~~1 1/8" DIA~~ PLUG WELDS
~~5"~~ 7" APART
STARBD SIDE
PORT SIDE
7/8" RNS 4 3/8" APART

WELDING OF STIFFENERS TO SIDE PLATES.

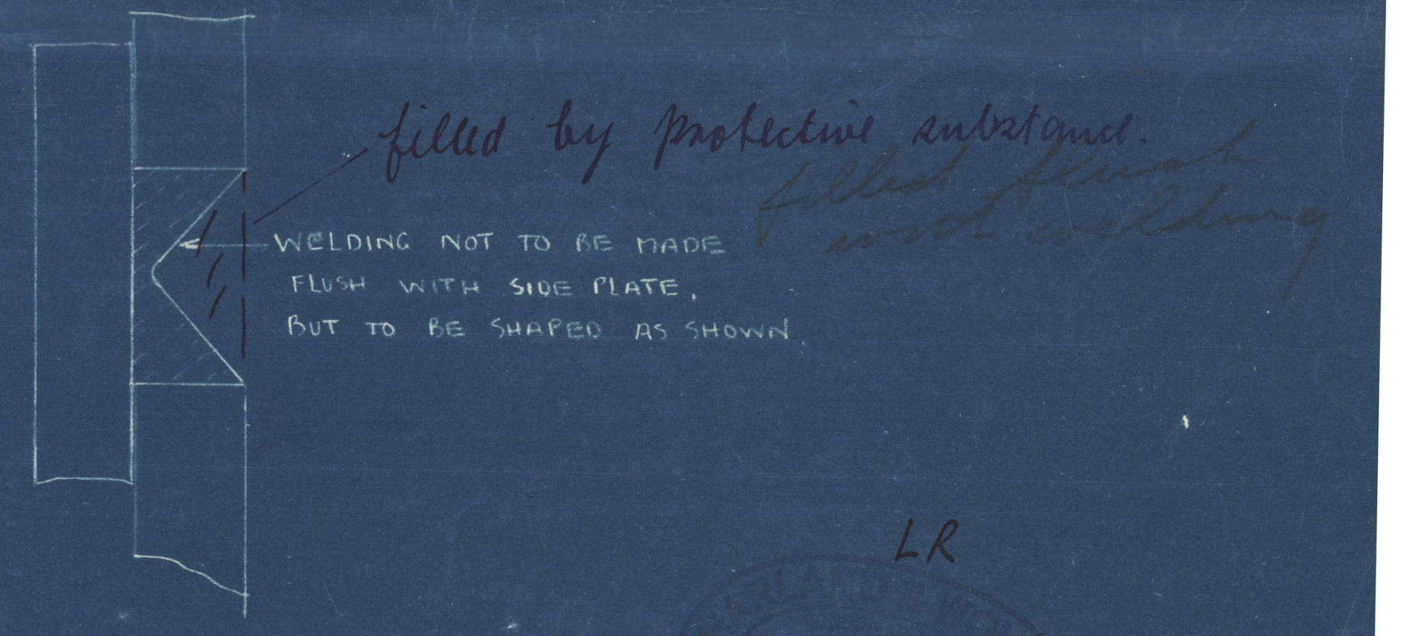

filled by protective substance.
filled flush with welding
WELDING NOT TO BE MADE FLUSH WITH SIDE PLATE, BUT TO BE SHAPED AS SHOWN.

DETAIL OF PLUG WELD.

LR

17.2.37.

27.2.37

© 2020 Lloyd's Register Foundation

002630-002638-0001

Pretoria Castle

Rudder

003958-003968-0034

"PRETORIA CASTLE"
RUDDER PLAN.

SCALE 1/2" = 1 FOOT.

MATERIAL: RUDDER STOCK - FORGED STEEL.
POST - FORGED STEEL.
ARMS & STRIPS - FORGED STEEL.
TO LLOYS & B.O.T TESTS.

SPEED OF VESSEL = 19 KNOTS
MAXIMUM ANGLE OF HELM = 35 DEGREES.
TOTAL EFFECTIVE AREA = 240 SQ FT
AREA COEFFICIENT. = 560' x 28·8 ÷ 240 = 66·8

CONTRACTOR TO SUPPLY COUPLING BOLTS COMPLETE KEY FOR SCREWING UP THESE BOLTS, LANTERN BUSH AND LIGNUM VITÆ STRIPS ALSO PINTLE
CONTRACTOR ALSO TO TAP LIFTING HOLE IN STOCK, CUT KEYWAYS AND MACHINE THE STOCK, COUPLING FACES AND GUDGEON, AND ALSO SHRINK ON LINER.
SIDE PLATES SUPPLIED AND FITTED BY SHIPBUILDERS.
ARMS TO BE AT RIGHT ANGLES TO ℄ OF POST, BORED OUT ACCURATELY AND CAREFULLY SHRUNK ON POST AND KEYED.
KEYS TO BE OF MILD STEEL AND TO HAVE 1/8 TAPER IN LENGTH.
KEYS AND SEATS TO BE ACCURATELY MACHINED TO DIMENSIONS GIVENS, AND ALL KEYS TO BE DRIVEN UP.
PARTS MACHINED WHERE TINTED RED
RUDDER TO BE COATED INSIDE WITH BITUMASTIC

CHARGE Nº 126.

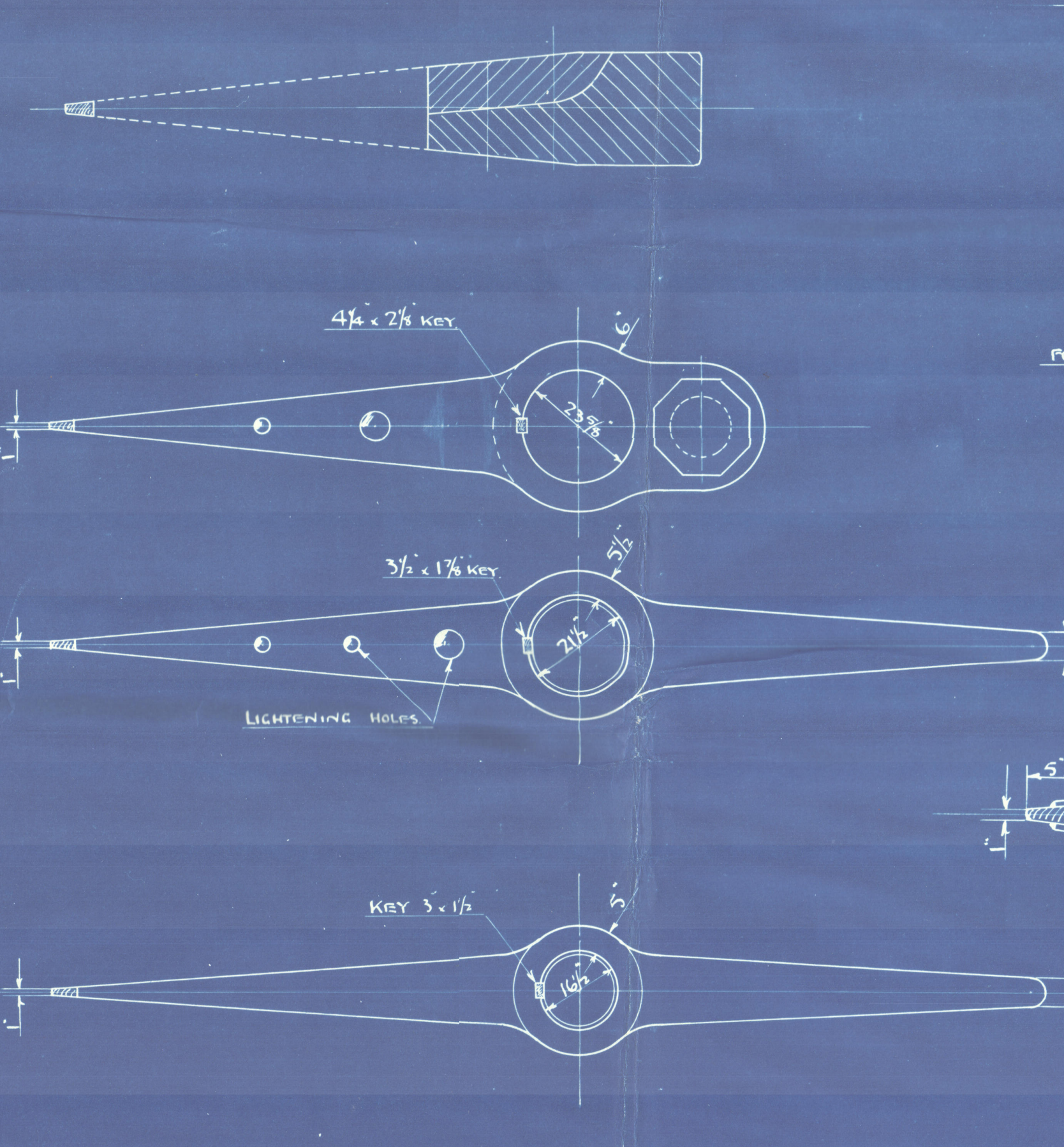
4¼ x 2⅛ KEY
23⅝
3½ x 1⅞ KEY
21½
LIGHTENING HOLES
KEY 3 x 1½
16½
6"
1"

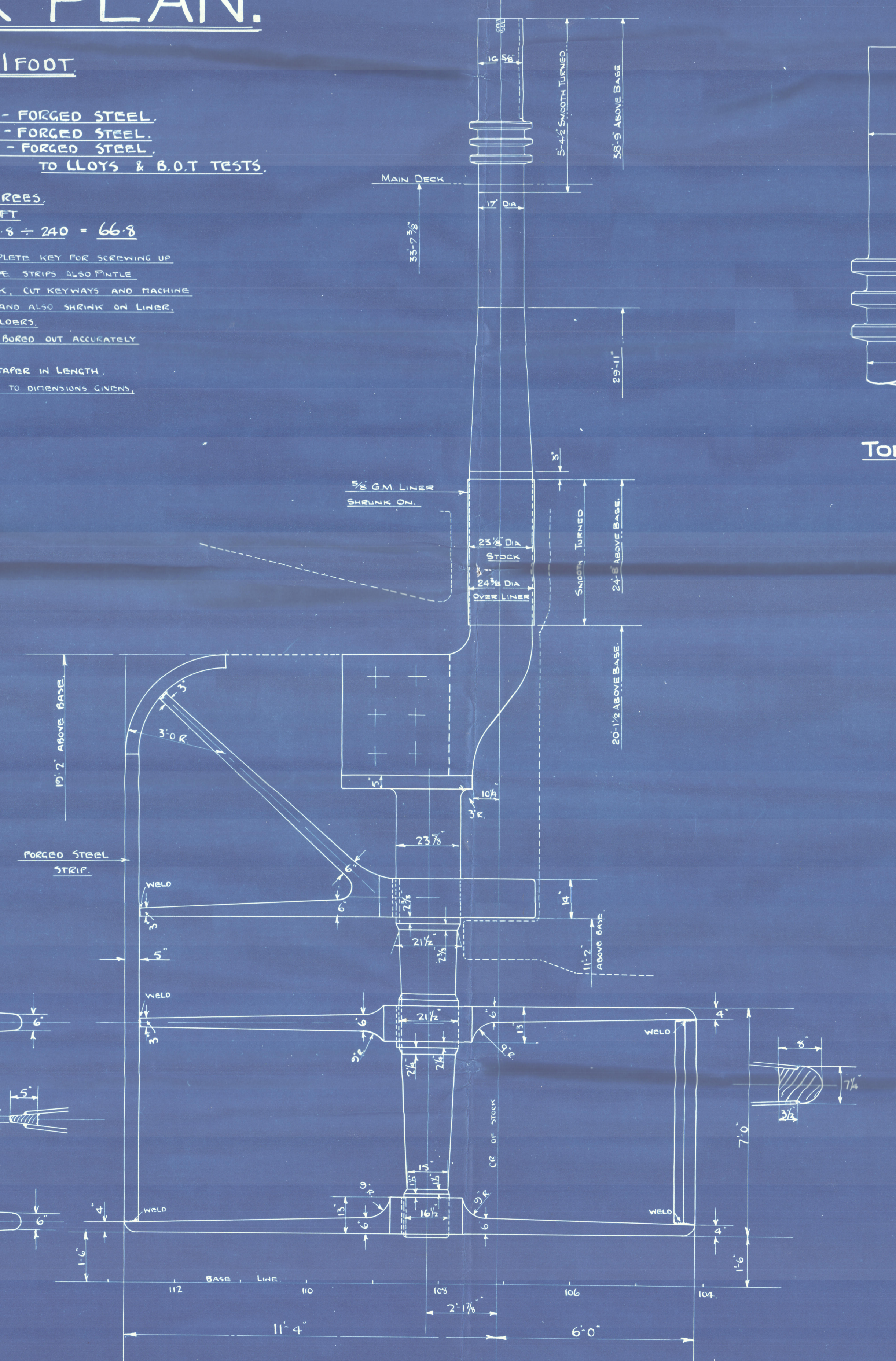
MAIN DECK
33'-7⅜
17" DIA
5/8 G.M LINER SHRUNK ON.
23⅝" DIA STOCK
24⅞ DIA OVER LINER
SMOOTH TURNED
24'-8" ABOVE BASE.
20'-1½ ABOVE BASE.
15'-2" ABOVE BASE
3'-0 R.
FORGED STEEL STRIP.
WELD
5"
23⅝"
21½"
11'-2 ABOVE BASE
14"
7'-0"
1'-6"
CR OF STOCK
BASE LINE
112
110
108
106
104
11'-4"
2'-1⅞"
6'-0"

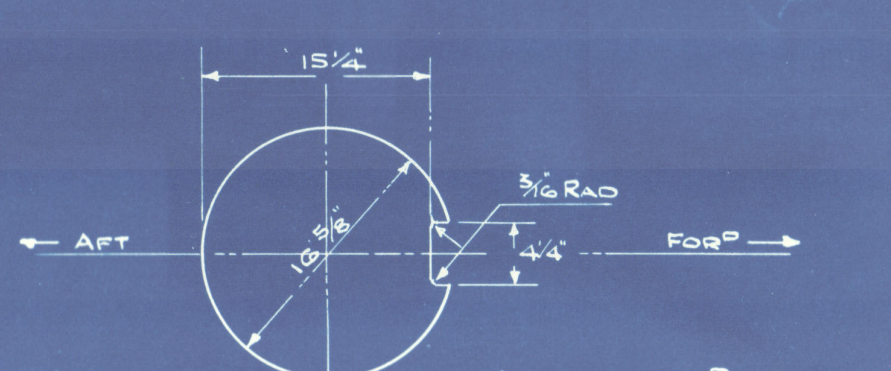
KEYWAY FOR^D SIDE.
15¼"
16⅝"
3/16 RAD
4¼"
AFT
FOR^D

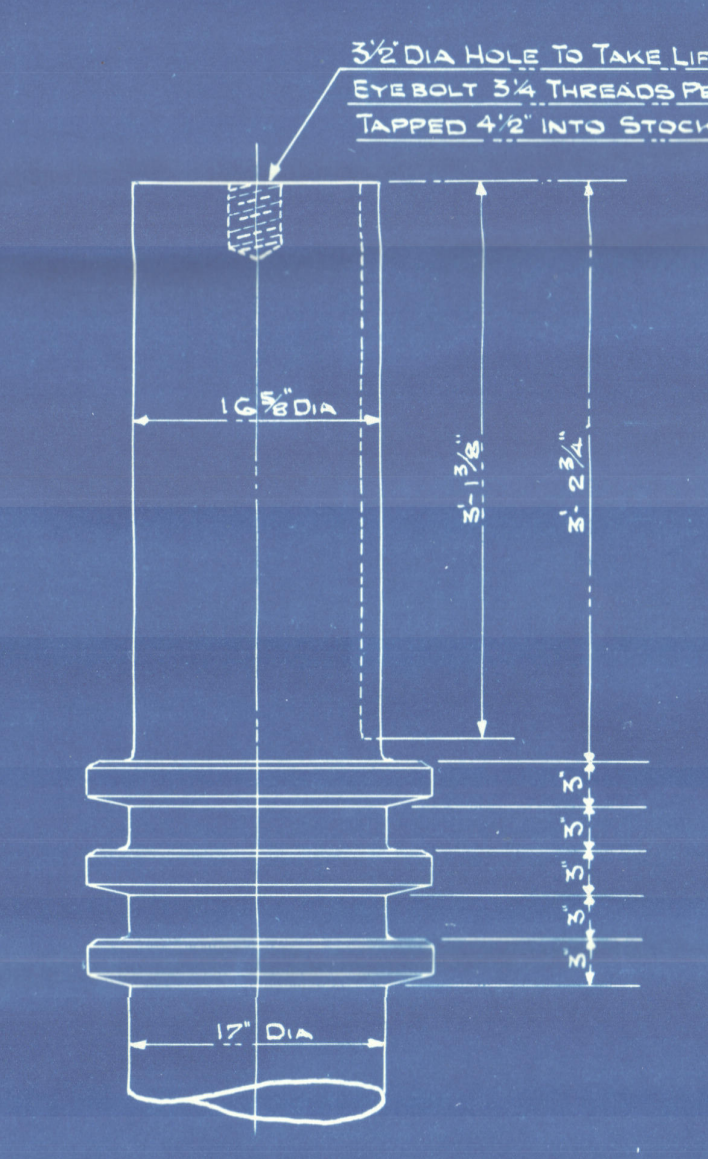
3½" DIA HOLE TO TAKE LIFTING EYEBOLT 3¼ THREADS PER INCH TAPPED 4½" INTO STOCK.
16⅝" DIA
3'-1⅜"
3'-2¾"
17" DIA
TOP OF STOCK.

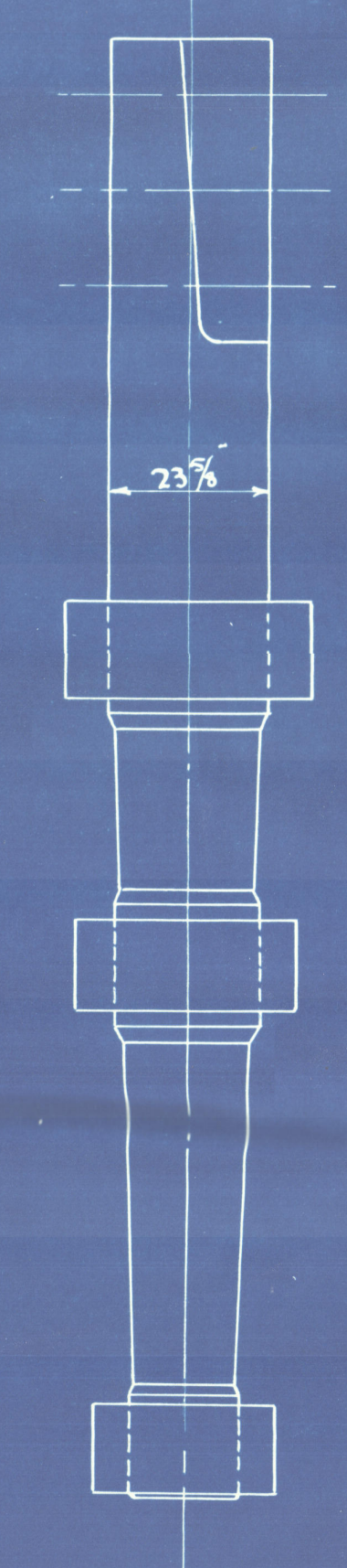

VIEW AT AFTER SIDE OF POST LOOKING FOR^D

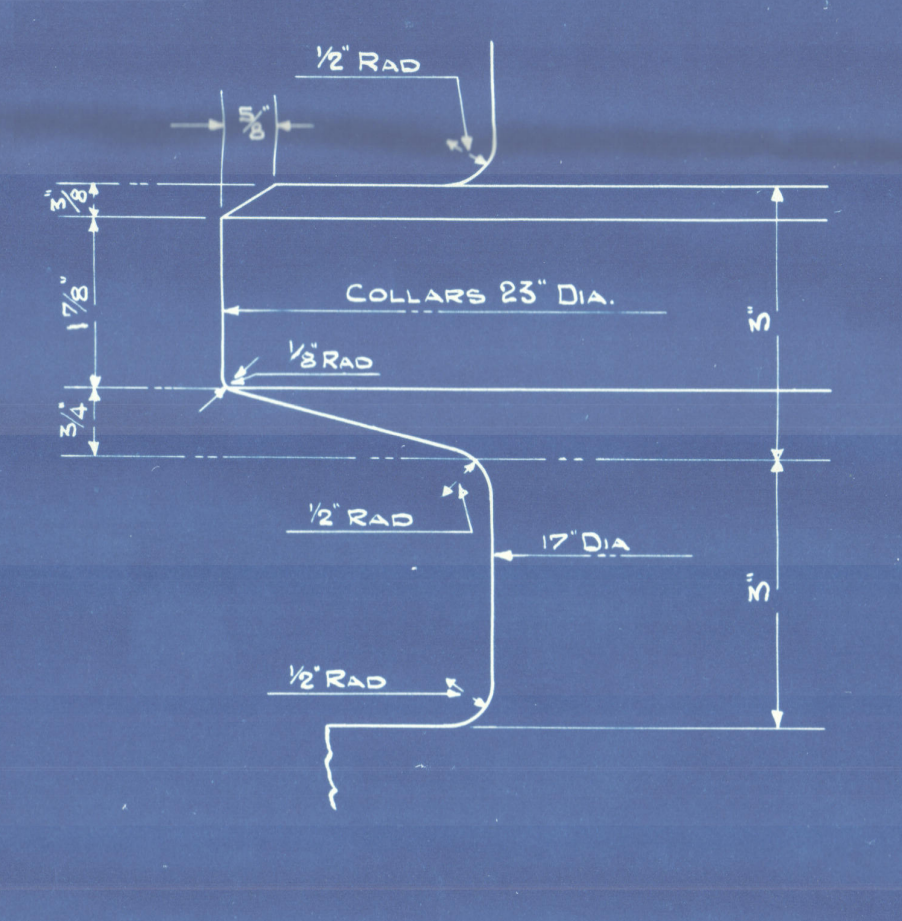
½" RAD
⅝"
COLLARS 23" DIA.
⅛" RAD
17" DIA
5"
DETAIL OF BEARING COLLARS.

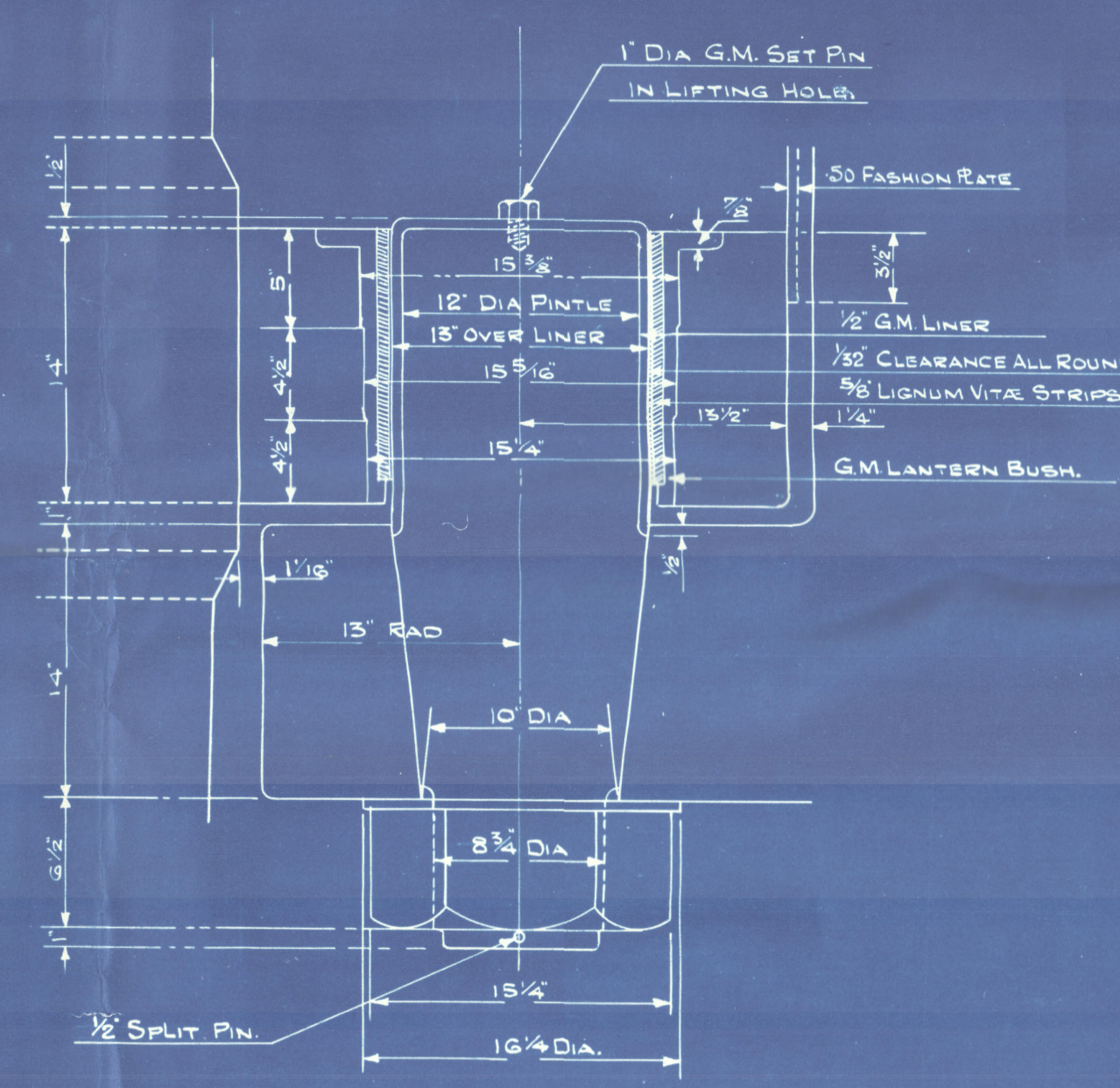
1" DIA G.M. SET PIN IN LIFTING HOLE.
·50 FASHION PLATE
12" DIA PINTLE
13" OVER LINER
½" G.M. LINER
1/32" CLEARANCE ALL ROUND
⅝" LIGNUM VITÆ STRIPS
G.M. LANTERN BUSH.
13" RAD
10" DIA
8¾ DIA
½" SPLIT PIN.
15¼"
16¼ DIA.
DETAIL OF PINTLE.
SCALE 1½" = 1 FOOT.

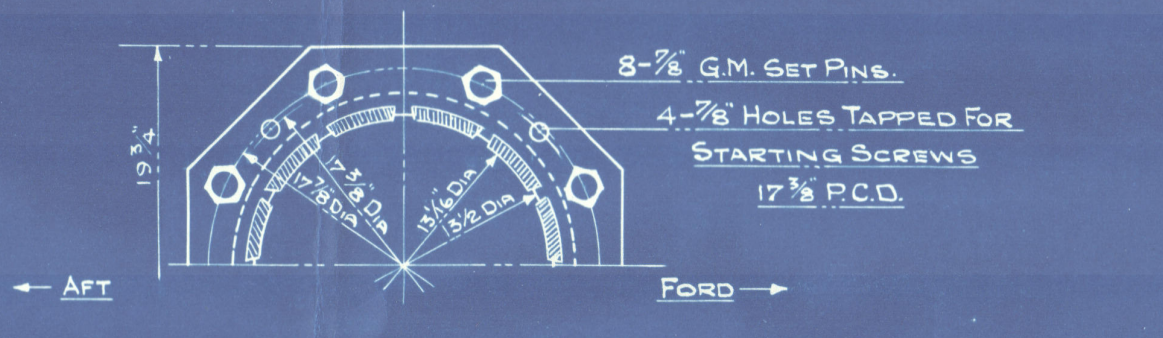
8-⅞ G.M. SET PINS.
4-⅞" HOLES TAPPED FOR STARTING SCREWS
17⅜ P.C.D.
AFT
FORD
DETAIL OF LANTERN BUSH.

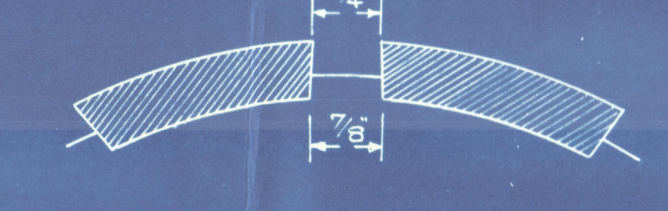

LIGNUM VITÆ STRIPS.
HALF SIZE.

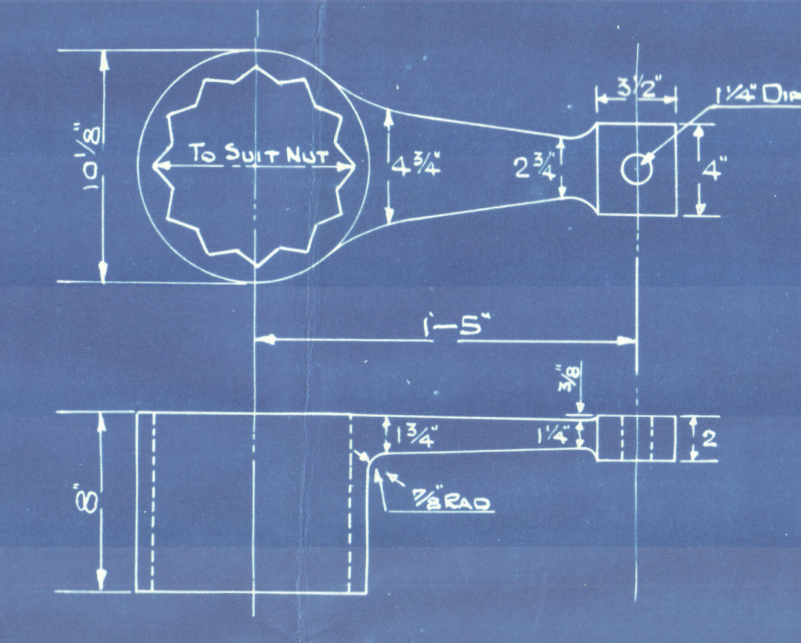
TO SUIT NUT
1¼" DIA
1'-5"
⅞" RAD
KEY FOR COUPLING BOLTS.

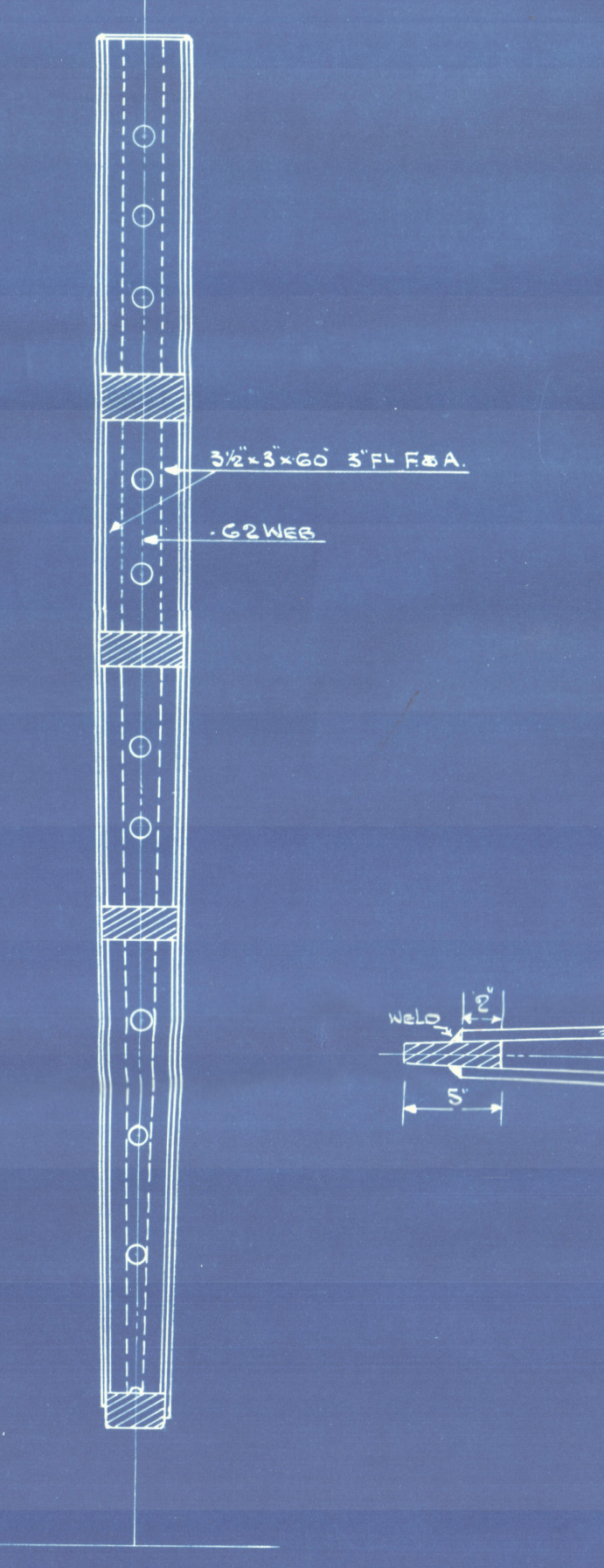
3½ x 3 x 60 5" FL F&A.
·62 WEB
WELD
5"
SECTION AT "A" "A".
LOOKING FOR^D

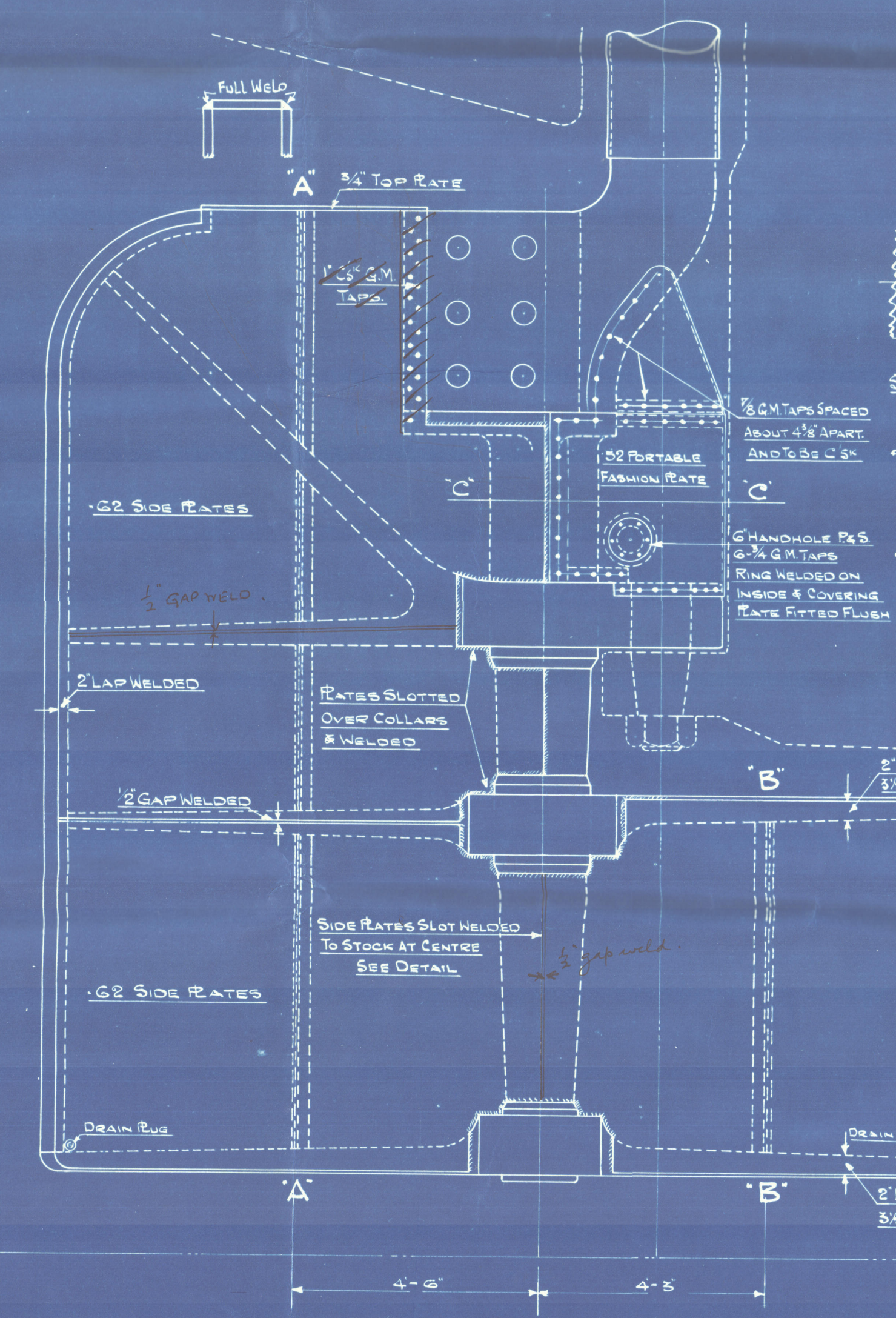
FULL WELD
"A"
¾" TOP PLATE
⅝" CSK G.M. TAPS.
⅞ G.M. TAPS SPACED ABOUT 4⅜" APART. AND TO BE C'SK
·52 PORTABLE FASHION PLATE
"C"
6" HANDHOLE P&S. 6-¾ G.M. TAPS RING WELDED ON INSIDE & COVERING PLATE FITTED FLUSH
·62 SIDE PLATES
½" GAP WELD.
2" LAP WELDED
PLATES SLOTTED OVER COLLARS & WELDED
½" GAP WELDED
SIDE PLATES SLOT WELDED TO STOCK AT CENTRE SEE DETAIL
½" gap weld.
"B"
2" LAP PORT 3½ LAP STARB^D SEE DETAIL
DRAIN PLUG
4'-6"
4'-3"

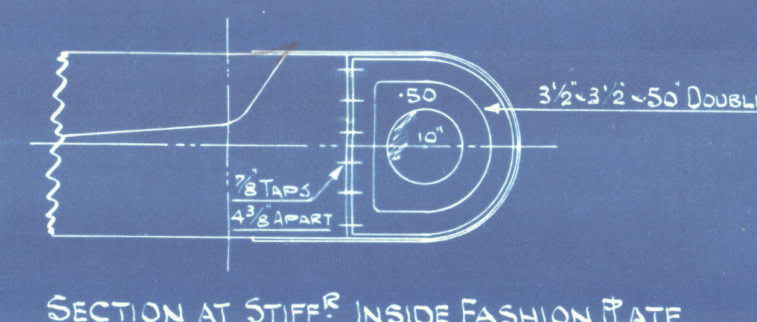
3½ x 3½ x ·50 DOUBLE
·50
10"
⅞ TAPS 4⅜ APART
SECTION AT STIFF^R INSIDE FASHION PLATE.

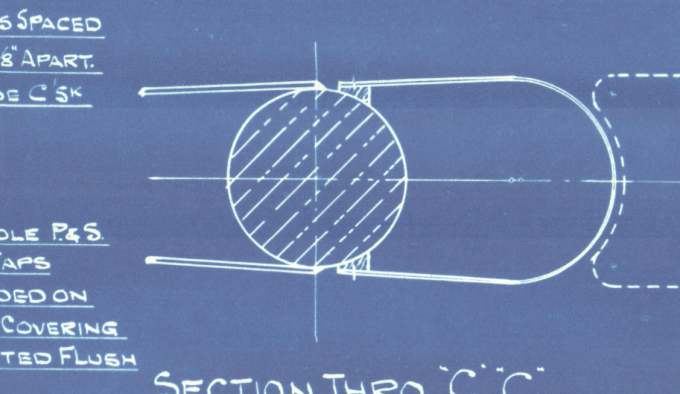
SECTION THRO "C" "C".

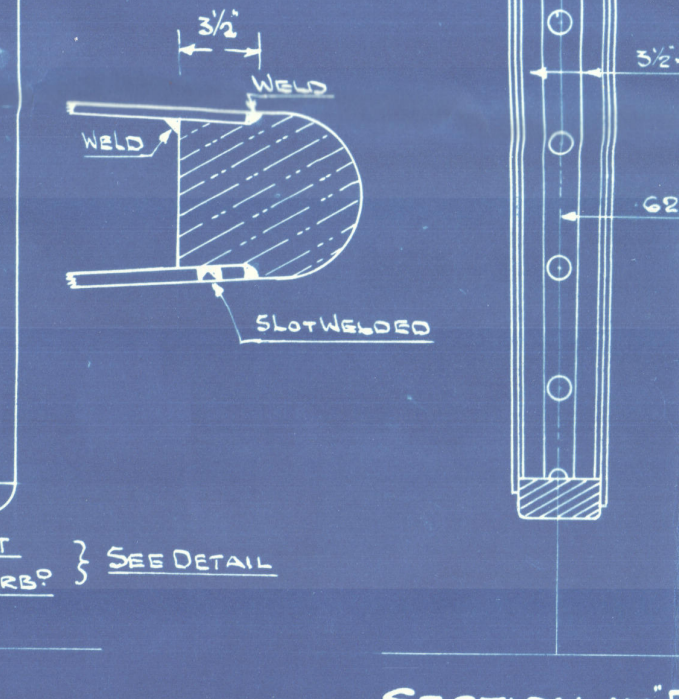
3½"
WELD
SLOT WELDED
3½ x 3 x 60 5" FL F&A.
·62 WEB
SECTION AT "B" "B".
LOOKING FOR^D

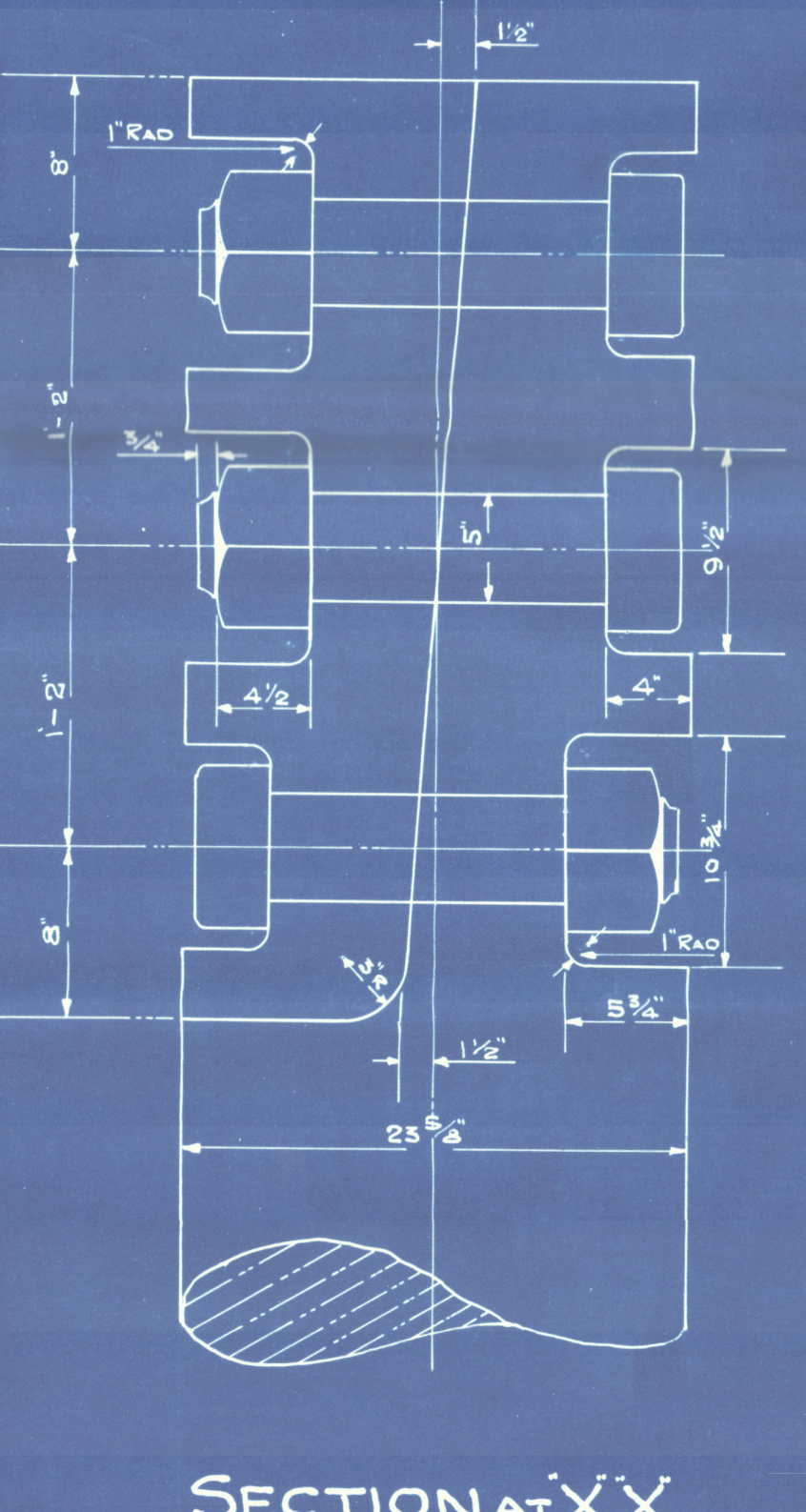
1½"
1" RAD
8"
1'-2"
¾"
4½
4"
9¾"
10¾"
5¾"
23⅝"
SECTION AT X.X.

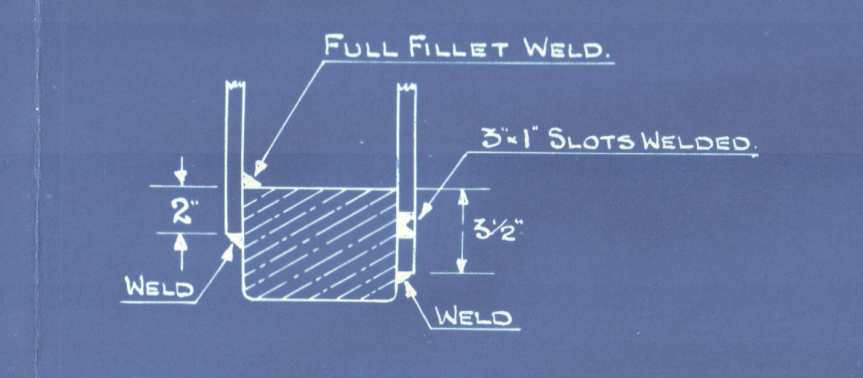
FULL FILLET WELD.
3 x 1" SLOTS WELDED.
2"
3½"
WELD
WELDING OF PLATES TO BOTTOM ARM.

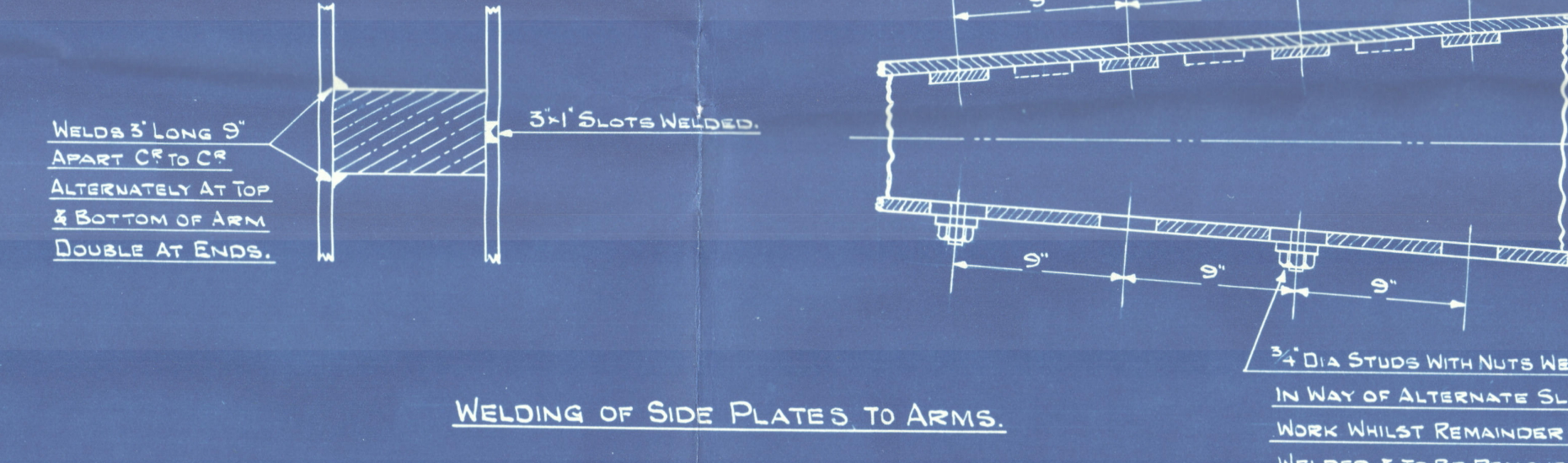
WELDS 3" LONG 9" APART C^R TO C^R ALTERNATELY AT TOP & BOTTOM OF ARM DOUBLE AT ENDS.
3 x 1" SLOTS WELDED.
9"
¾" DIA STUDS WITH NUTS WELDED TO ARM IN WAY OF ALTERNATE SLOTS FOR CLOSING WORK WHILST REMAINDER OF WORK IS BEING WELDED & TO BE REMOVED FOR WELDING AFTERWARDS.
WELDING OF SIDE PLATES TO ARMS.

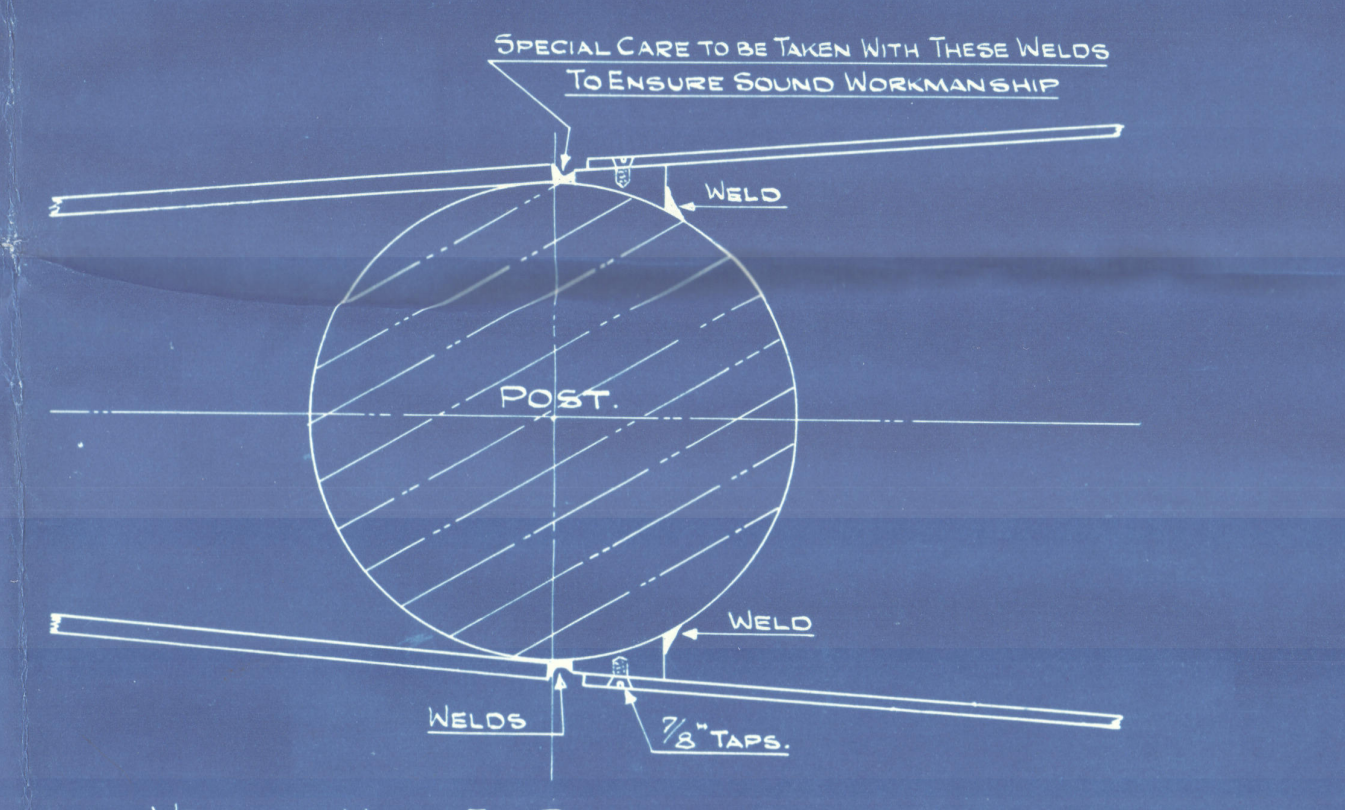
SPECIAL CARE TO BE TAKEN WITH THESE WELDS TO ENSURE SOUND WORKMANSHIP
WELD
POST.
WELDS
⅞" TAPS.
WELDING IN WAY OF TOP PORTION OF RUDDER POST.

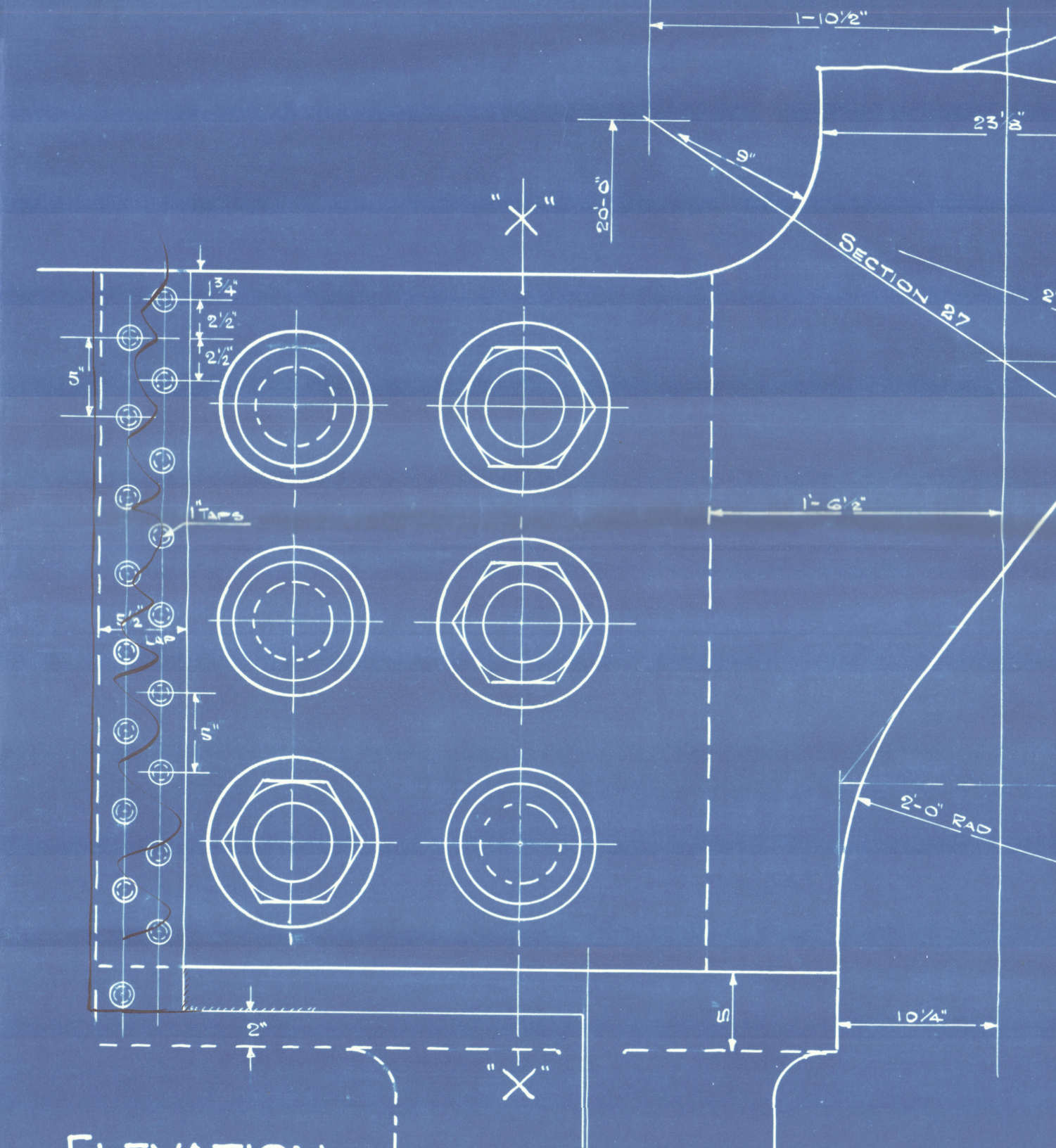
1'-10½"
23⅝"
"X"
20'-0"
SECTION 27
2'-6" RAD
1" TAPS
1'-6½"
2'-0" RAD
18'-9" ABOVE BASE
18'-11 ABOVE BASE
16'-6 ABOVE BASE
10¼"
23⅝"
ELEVATION
6-5" TURNED & FITTED BOLTS.

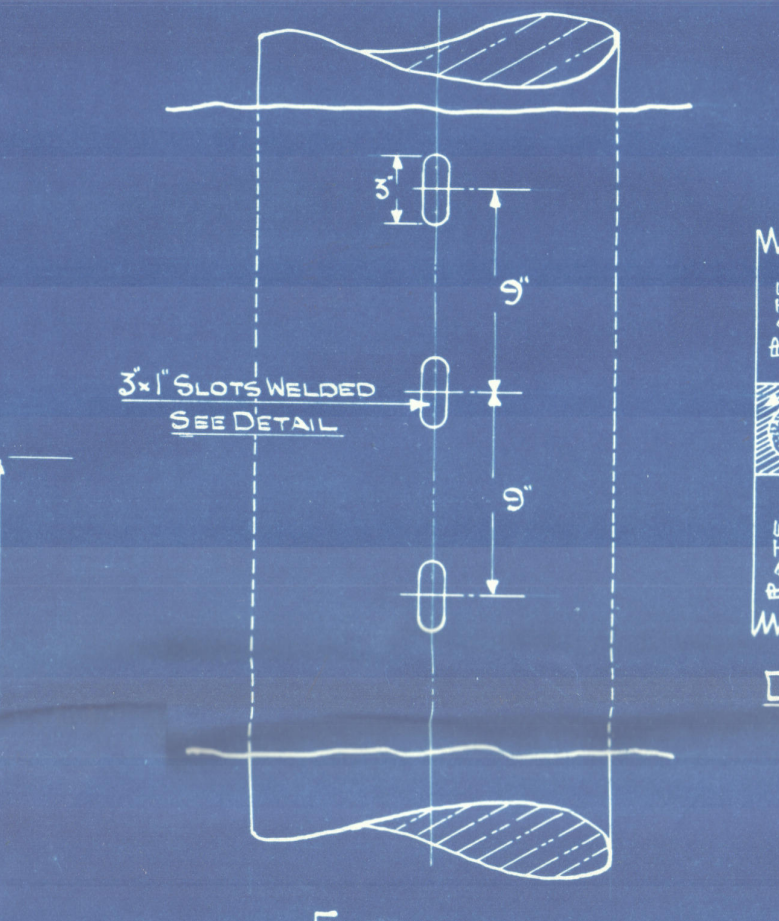
3"
9"
3 x 1" SLOTS WELDED SEE DETAIL
ELEVATION.

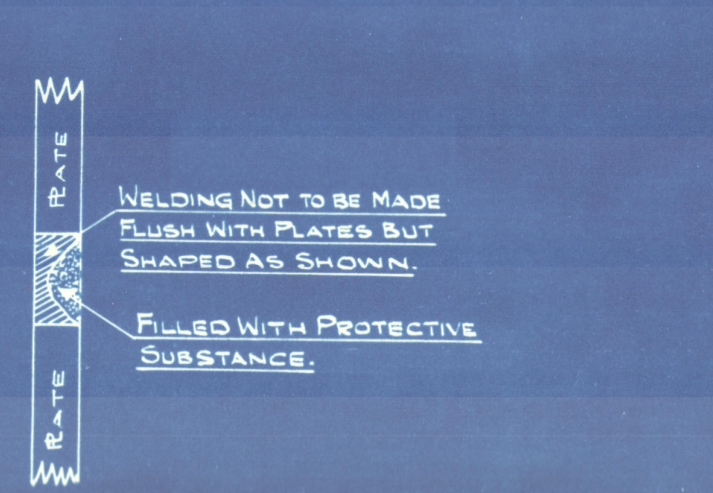
PLATE
WELDING NOT TO BE MADE FLUSH WITH PLATES BUT SHAPED AS SHOWN.
FILLED WITH PROTECTIVE SUBSTANCE.
DETAIL OF PLUG WELD.

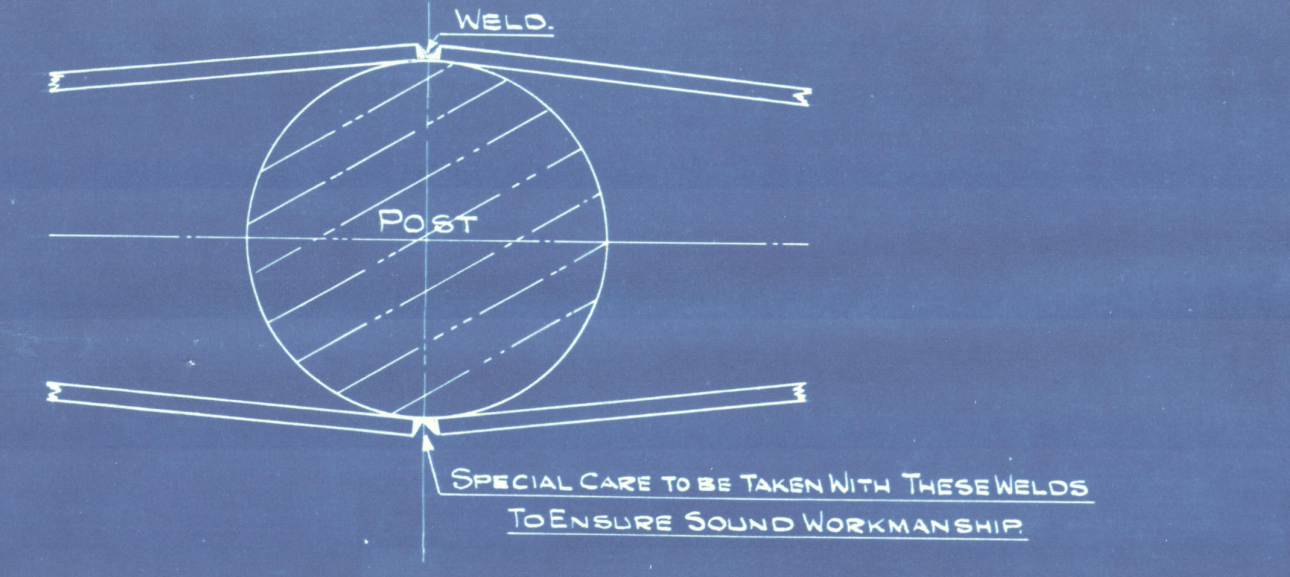
WELD.
POST
SPECIAL CARE TO BE TAKEN WITH THESE WELDS TO ENSURE SOUND WORKMANSHIP.
WELDING IN WAY OF BOTTOM PORTION OF RUDDER POST.

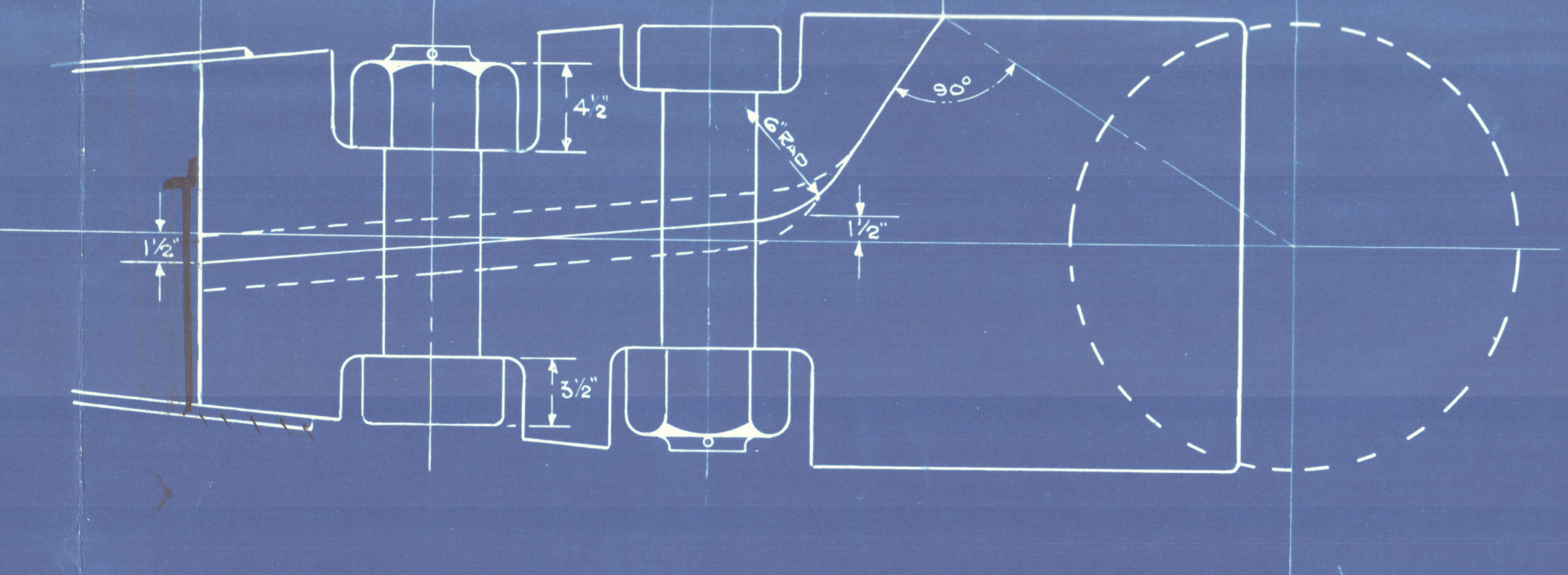
12"
1'-2½"
1'-6½"
4½"
3½"
90°
6" RAD
1½"
SECTIONAL PLAN.

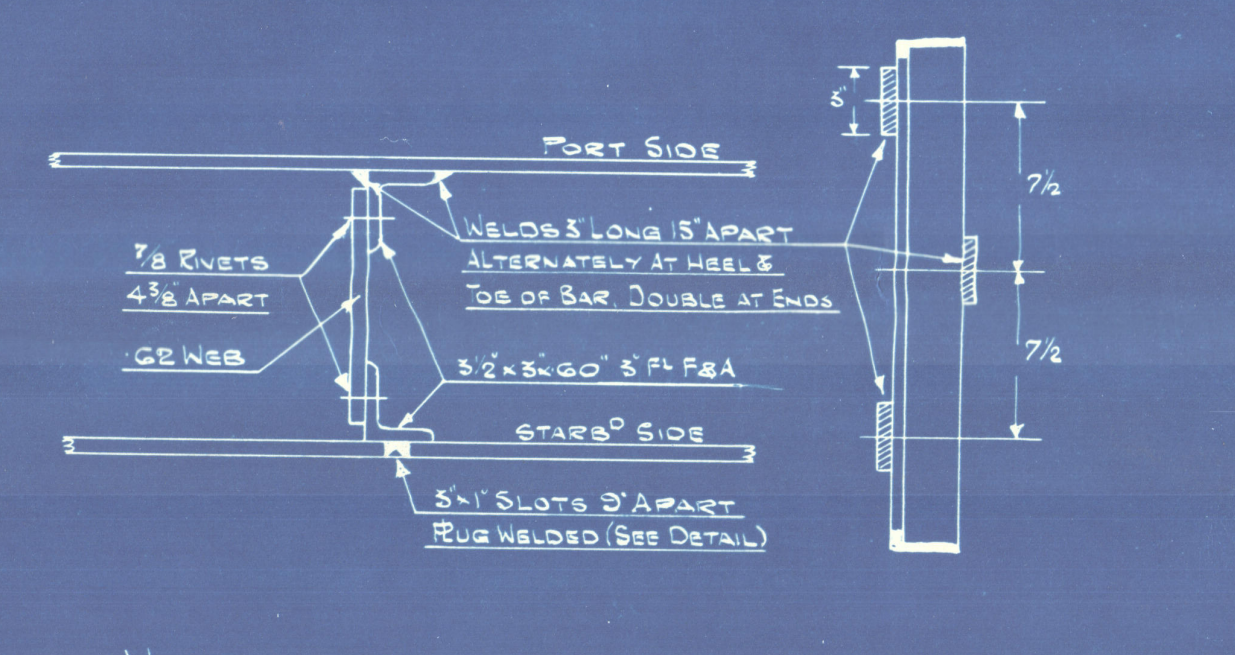
PORT SIDE
⅞ RIVETS 4⅜ APART
·62 WEB
WELDS 3" LONG 15" APART ALTERNATELY AT HEEL & TOE OF BAR. DOUBLE AT ENDS
3½ x 3 x 60 5" FL F&A
STARB^D SIDE
3 x 1" SLOTS 9" APART PLUG WELDED (SEE DETAIL)
5"
7½
WELDING OF STIFFENERS TO SIDE PLATES.

L.R.

22/6/39

HARLAND & WOLFF LTD
LONDON GLASGOW
19-6-39
BELFAST
LIVERPOOL & SOUTHAMPTON
SHIPBUILDERS & ENGINEERS